BBT AUSTRALIA

Easyrider 26”

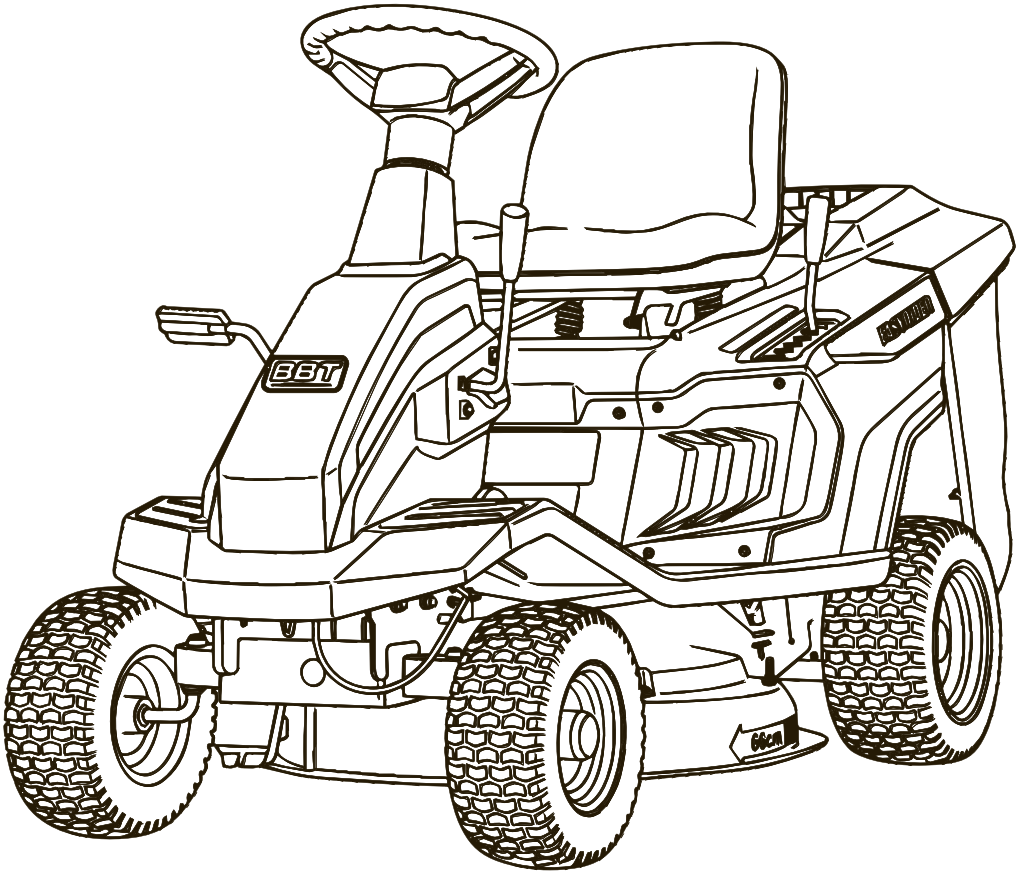

OWNER’S MANUAL

BBT-LM-ER-26

IMPORTANT: Please make sure that the person who is to use this equipment carefully reads and understands these instructions before operating.

Save this manual for future use

Thank you for choosing our equipment. It was carefully engineered to provide excellent performance when properly operated and maintained.

Please read this entire manual before operating the equipment. It instructs you on how to set up, operate, and maintain your equipment safely and easily. Ensure that you and any other persons operating the equipment carefully follow the recommended safety practices at all times, as failure to do so could result in personal injury or property damage.

All information in this manual is relevant to the most recent product information available at the time of printing. Review this manual frequently to familiarise yourself with the equipment, its features, and operation. Please note that this Owner's Manual may cover a range of product specifications for various models. Characteristics and features discussed and/or illustrated in this manual may not be applicable to all models. We reserve the right to change product specifications, designs, and equipment without notice and without incurring obligation.

Customer Support

Before initiating a product return, kindly reach out to our dedicated Customer Support Department at Bigger Boyz Toyz. We are here to assist you.

Phone: 02 4257 4787
Email: bbt@bbta.com.au
Warehouse: Unit 2/3 Delta Place, Albion Park Rail NSW 2527

If you have difficulty assembling the product or have any questions about the controls, operations, or maintenance of the equipment, please don't hesitate to get in touch with our Customer Support Department.

CONTENTS

SAFETY & ALERT SYMBOLS 4
FOR YOUR SAFETY AND THE SAFETY OF OTHERS! 4
ADDITIONAL INFORMATION AND POTENTIAL CHANGES 4
HAZARDS SYMBOLS 5
COMPONENTS OF THE MECHANICAL MACHINE 6
GENERAL SAFETY 8
TRAINING 8
PRELIMINARY OPERATIONS 8
WORK/MACHINE AREA 9
OPERATION 10
MAINTENANCE, STORAGE AND STORAGE TRANSPORT. 11
ENVIRONMENTAL PROTECTION 11
ASSEMBLY 12
USING THE MACHINE 17
PRELIMINARY OPERATIONS 17
PREPARING THE MACHINE BEFORE STARTING WORK 17
START-UP 18
DRIVE WITHOUT CUTTING 19
CUTTING 20
REVERSE CUT 20
GRASS CATCHER EMPTYING 21
AFTER USE 22
STORAGE OF BATTERY 23
MAINTENANCE 24
ENGINE SERVICE 24
MAINTENANCE SCHEDULE 24
SPECIFICATION 25
TROUBLESHOOTING 26

SAFETY & ALERT SYMBOLS

FOR YOUR SAFETY AND THE SAFETY OF OTHERS!

Safety precautions should be followed all the time when operating this equipment. Failure to read and understand the Safety Messages and Operating Instructions could result in injury to yourself and others.

This Operating Instructions has been developed to provide complete instructions for the safe and efficient operation of this equipment. Refer to the engine manufactures instructions for data relative to its safe operation.

WARNING: Read and thoroughly understand all instructions in this equipment and on the safety decals before assembling or operating this equipment. Failure to do so may cause serious injury or death. Do not allow anyone to operate this equipment who has not read this manual. As with all power equipment, this equipment can be dangerous if assembled or used improperly. Do not operate this equipment if you have any questions concerning its safe operation. Contact our Customer Support Department for assistance in addressing any queries or concerns.

This SAFETY ALERT SYMBOL identifies important safety messages in this manual. Failure to follow this important safety information may result in serious injury or death.

⚠ DANGER	**DANGER** indicates a hazardous situation which, if not avoided, will result in serious injury or death.
⚠ WARNING	**WARNING** indicates a hazardous situation which, if not avoided, could result in serious injury or death.
⚠ CAUTION	**CAUTION** indicates a hazardous situation which, if not avoided, could result in minor or moderate injury.

ADDITIONAL INFORMATION AND POTENTIAL CHANGES

We reserve the right to discontinue, change, and improve our products at any time without notice or obligation to the purchaser. The descriptions and sections contained in this manual were in effect at the time of printing. Equipment described within this manual may be optional. Some illustrations may not be applicable to your equipment.

⚠ WARNING

Your Responsibility—Restrict the use of this equipment to persons who have read, understood, and will follow the warnings and instructions in this manual and on the machine

SAVE THESE INSTRUCTIONS!

HAZARDS SYMBOLS

Potential hazards associated with the operation of this equipment will be referenced with Hazard Symbols which appear throughout this manual.

	READ THE OWNER'S MANUAL(S) : Read, understand and follow all instructions in the manual(s) before attempting to assemble and operate.
	FACE PROTECTION : Always wear safety goggles or safety glasses with side shields or a face shield when operating this equipment as well as ear protection.
	WEAR GLOVES : Always wear non-slip, heavy-duty protective gloves when operating this equipment.
	WEAR SAFETY FOOTWEAR : Always wear non-slip steel-toed safety footwear when operating this equipment.
	RESPIRATORY HAZARDS : ALWAYS wear approved respiratory protection when required.
	BEWARE OF ROTATING BLADES : This equipment has a rotating cutting blade capable of amputating hands and feet and throwing objects. Keep hands and feet out of openings while machine is running. Failure to observe these safety instructions could result in serious injury or death.
	BEWARE OF FLYING OBJECTS : Beware of thrown objects, which can ricochet causing serious injury to the eyes. Always wear eye & ear protection when operating.
	Never wear loose clothes or long jewellery and keep your long hair secured when operating this equipment. Never operate this equipment in bare feet or sandals.
	PETROL OIL : Petrol is extremely flammable and the vapours are explosive. Serious personal injury can occur when petrol is spilled on you or your clothing, which can ignite. In the event of a petrol spill, wash your skin and change clothes immediately.
	BURN HAZARDS : Engine components can produce intense heat. To avoid burns, DO NOT touch these areas while the engine is running or right after operations. Never operate the engine with removed heat shields or guards.
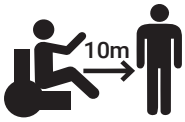	**BYSTANDERS:** Keep bystanders, helpers, pets, and children at least 10m from the equipment while it is in operation. Stop equipment if anyone enters the area. **SINGLE OPERATOR:** Only one person should operate the equipment at a time.
	RISK OF MACHINE ROLL-OVER: Do not use the machine on slopes exceeding 10°
	DO NOT use in the rain.

COMPONENTS OF THE MECHANICAL MACHINE

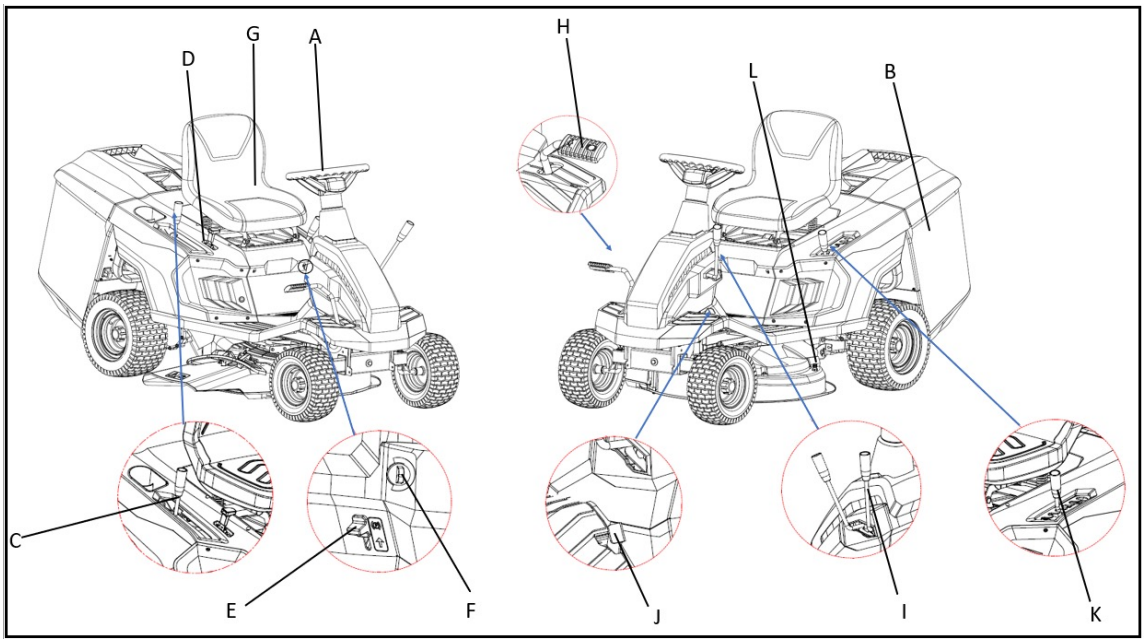

A	Steering wheel	**G**	Seat
B	Grass bag	**H**	Brake pedal
C	Gear shift lever	**I**	Blade clutch handle
D	Clutch handle	**J**	Cutting pedal when backward
E	Parking handle	**K**	Cutting height adjustment handle
F	Start key	**L**	Cleaning connection

Grass Bag Installation	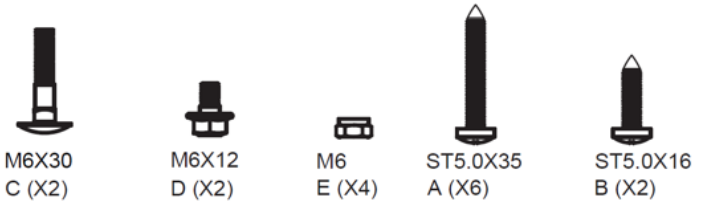
Seat Installation	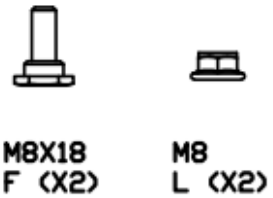
Steering Wheel Installation	
Rear Plate Installation	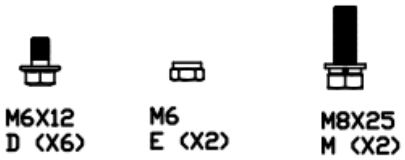
Blade Clutch Handle Installation	
Cutting Height Adjustment & Speed Handle	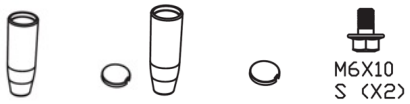
Fuse, Charger and Ignition Key	
Tooling Sets and Funnel	
Side Discharger	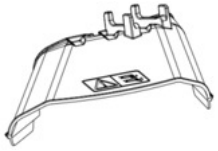

GENERAL SAFETY

TRAINING

» Familiar with the control and correct use of the machine. Learn how to quickly stop the engine. Failure to follow warnings and instructions may result in fire and/or serious injury.

» Do not allow children or people unfamiliar with the instructions to use the machine. Local laws may specify the minimum age for users.

» If the user feels tired or unwell, or takes drugs, alcohol, or substances that can affect reaction and attention, do not use the machine.

» Please remember that operators or users are responsible for accidents and unexpected events that may occur on other people or property. It is the responsibility of users to assess potential risks in the work area and take all necessary preventive measures to ensure their own and others' safety, especially on slopes or rough, slippery, and unstable ground.

» If selling or lending the machine to others, please ensure that the operator carefully reads the user instructions contained in this manual.

PRELIMINARY OPERATIONS

A . Personal protective equipment

1. Always wear suitable work clothes, wear-resistant safety shoes with anti slip soles, and long pants. Do not operate the machine barefoot or in sandals. Wear hearing protection.
2. When your hands are in danger, please wear protective gloves.
3. Do not wear scarves, shirts, necklaces, bracelets, loose flowing clothes, ties or ties, or any hanging or swinging accessories that may hang from any objects or materials in the machine or work area.
4. If your hair is very long, tie it back.

B. Preparation

DANGER! Petrol is highly flammable.

» Store fuel in containers specifically designed for this purpose

» Refuel outdoors only and do not smoke while refuelling

» Add fuel before starting the engine. Never remove the cap of the fuel tank or add petrol while the engine is running or when the engine is hot.

» If you spill petrol, do not start the engine and move the machine away from the area of spillage. Do not create any source of ignition until the petrol vapours have evaporated

» Put back and tighten all fuel tank and container caps securely

1. Replace faulty silencers.
2. Before use, always inspect the machine to check that the blades, blade bolts and cutter assembly are not worn or damaged. Replace worn or damaged blades and bolts in sets to preserve balance.
3. On multi-bladed machines, remember that the rotation of one blade can cause other blades to rotate.

WORK/MACHINE AREA

1. Thoroughly inspect the entire work area and remove any objects (stones, branches, wire, bones, etc.) that may be thrown or damaged by the machine to the cutting/ rotating device.
2. Stay away from the discharge outlet.
3. Do not detach, deactivate, remove, or tamper with installed safety systems/ microswitches.
4. Pay close attention to the sloping ground and be particularly careful to prevent the machine from tipping over or losing control. The main reasons for losing control are:
   - » Insufficient wheel grip.
   - » The speed is too fast.
   - » A sharp change in direction.
   - » Insufficient braking.
   - » Lack of understanding of the impact of ground conditions.
   - » Use a machine for towing.
5. Pay attention to traffic conditions when using machines near the road.
6. Release the cutting device, stop the engine and remove the ignition key to ensure that all moving parts have stopped completely:
   - » When transporting machinery;
   - » When the machine is unattended;
   - » Before removing the blockage or dredging the unloading conveyor;
   - » Before checking, cleaning or working on the machine;
   - » After hitting a foreign object. Inspect the machine for damage and, if necessary, repair it before reuse;
   - » If the machine starts to vibrate abnormally: check for possible damage; Check and tighten any loose parts; All inspections, repairs and replacements are performed by an authorized service center.

Note that the cutting device is equipped with multiple cutting devices, as the rotating cutting device will trigger the rotation of the other cutting devices.

7. Keep away from outfalls.
8. Do not touch engine parts that heat up during operation. There is a risk of burns.
9. To avoid fire hazards, do not leave the machine in tall grass while the engine is running.

OPERATION

1. Do not start the engine in a confined space where dangerous carbon monoxide fumes can collect.

2. Mow only in daylight or good artificial light

3. Before starting the engine, disengage the blades and shift into neutral.

4. Do not use the machine on slopes with longitudinal gradients of more than 15° (27%) Do not use the machine on slopes with lateral gradients above 10°(18%).

5. Remember there is no such thing as a “safe” slope. Travelling on grass slopes requires particular care. To guard against overturning:

   » Do not stop or start suddenly when going up or downhill.

   » Engage the drive slowly and always keep the machine in gear, especially when travelling downhill.

   » Machine speeds should be kept low on slopes and during tight turns.

   » Stay alert for humps and hollows and other hidden hazards.

   » Never mow across the face of the slope.

6. Use care when pulling loads or using heavy equipment:

   » Use only approved drawbar hitch points.

   » Limit loads to those you can safely control.

   » Do not turn sharply. Use care when reversing.

   » Use counterweight(s) or wheel weights whenever advised in the instructions manual.

7. Stop the blades before crossing surfaces other than grass

8. Never use the machine with damaged guards, or without the safety protective devices in place.

9. Do not change the engine governor settings or overspeed the engine. Operating the engine at excessive speed can increase the risk of personal injury.

10. Before leaving the driving seat:

    » Disengage the blades and lower the attachments.

    » Go into neutral and apply the parking brake.

    » Stop the engine and remove the ignition key.

11. Disengage the blades, stop the engine and remove the ignition key:

    » Before clearing blockages or unclogging the collector channel.

    » Before cleaning, checking or servicing the machine.

    » After striking a foreign object. Inspect the machine for damage and make repairs before restarting and operating the machine.

    » If the machine starts to vibrate abnormally (check for the causes immediately).

12. Disengage the blades for transport or whenever they are not in use.

13. Stop the engine and disengage the blades:
    - » Before refueling;
    - » Before making height adjustment unless adjustment can be made from the operator's position.
14. Reduce the throttle during engine run-out. If the engine is provided with a shut-off valve, cut off the fuel when you have finished mowing.
15. Watch out for traffic when crossing or near roadways
16. Never direct discharge of material toward bystanders nor allow anyone near the machine while in operation.

MAINTENANCE, STORAGE AND STORAGE TRANSPORT.

Ensure regular maintenance and proper storage to maintain machine safety and high performance levels.

1. Never use a machine with worn or damaged parts. Faulty or worn parts must always be replaced and never repaired. Only the original spare parts are used.
2. Be careful when adjusting the machine to prevent your fingers from getting between the moving parts of the cutting device and the fixed parts of the machine.
3. To reduce the risk of fire, check oil and/or fuel regularly for leaks.
4. Do not store machines containing fuel oil in areas where fuel steam may come into contact with open flames, sparks, or strong heat sources.

ENVIRONMENTAL PROTECTION

1. Strictly comply with local regulations regarding the disposal of packaging, damaged parts or any elements that have a strong impact on the environment; This waste must not be disposed of together with ordinary waste, but must be separated and sent to a collection centre, which will recycle the material.
2. Comply with local regulations regarding disposal of waste materials.
3. When the machine is out of use, do not dispose of it in the environment, but instead send it to a waste treatment facility in accordance with current local regulations.

ASSEMBLY

IMPORTANT Unpacking and assembly operations should be carried out on a flat, stable surface with sufficient space for handling the machine and its packaging, using appropriate tools.

1. UNPACKING

Step 1: Open the package carefully and do not lose components.

Step 2: Check the documentation in the box, including these instructions.

Step 3: Remove all parts from the box.

Step 4: Take the following precautions to remove the machine from the packaging:

» Move the machine assembly to its maximum height to prevent damage when the machine is lifted from the base tray.

» Lift the machine off the base plate.

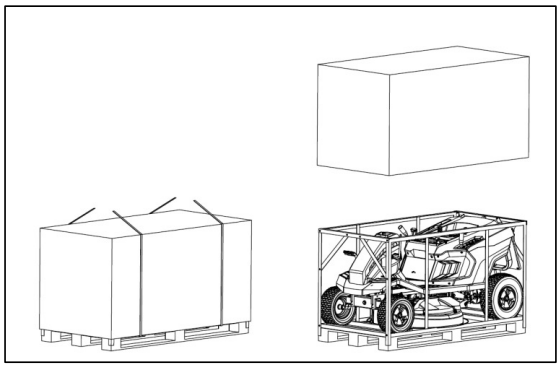

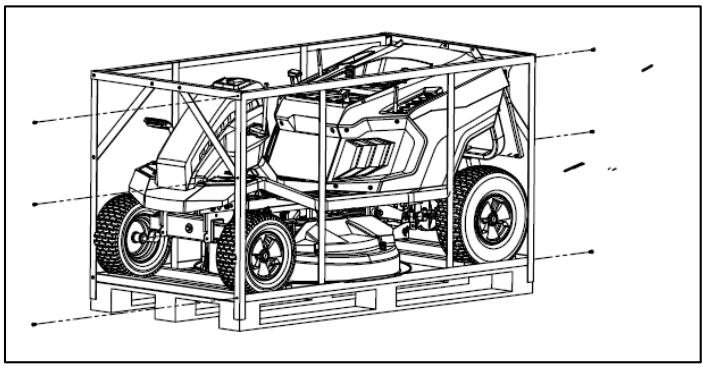

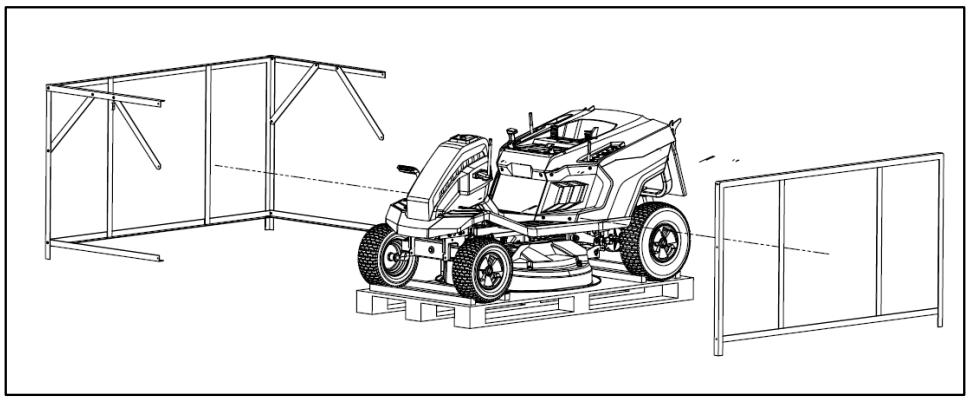

2. ASSEMBLY OF THE REAR PLATE

Align the plate holes with the holes on the back of the machine and tighten them with the nut (M6) and bolt (M6x12 & M8x25).

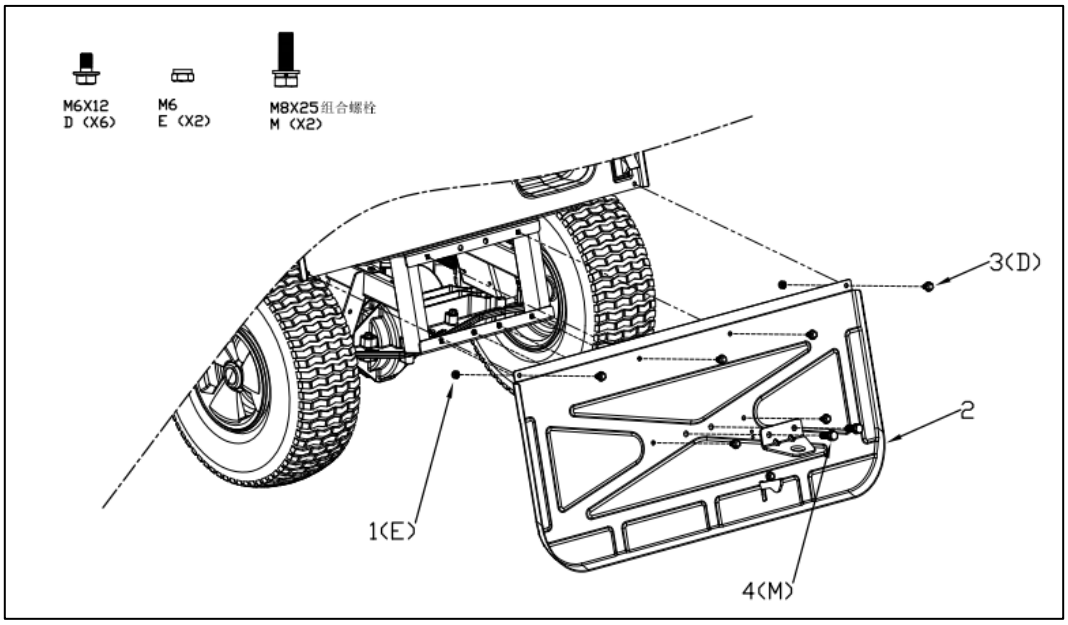

3. STEERING WHEEL INSTALLATION

First Insert the sleeve into the steering wheel shaft, as shown in Figure 1, then Insert the decorative cover as shown in Figure 2, insert the steering wheel and fix by bolt (M8x160) and washer, install the decorative cover as shown in Figure 3.

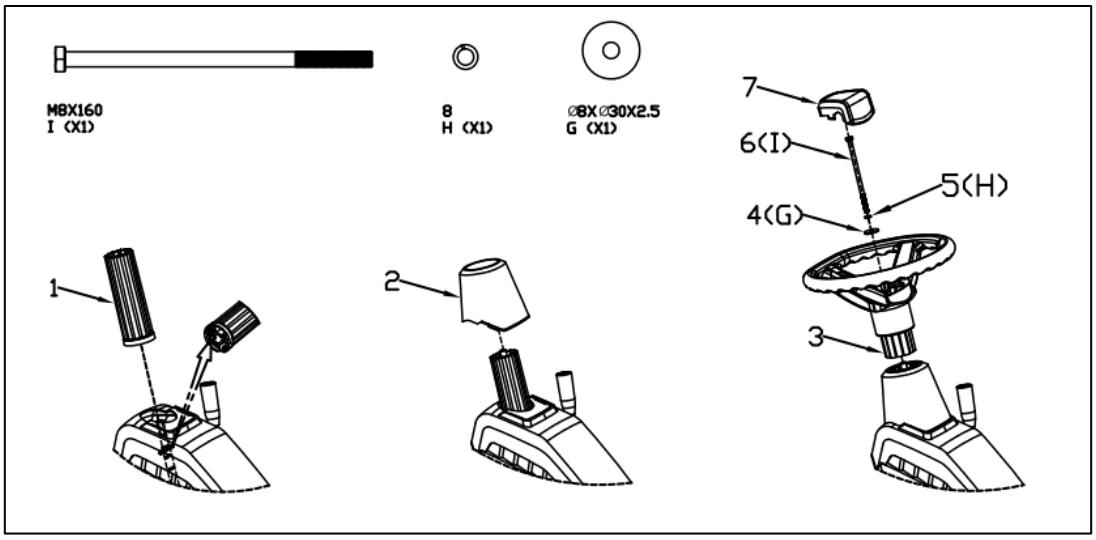

4. SEAT INSTALLATION

This step has been pre-installed by manufacturer, the user can adjust the seat to forward or back. (Align the holes on the seat with the holes on the fixing plate, secure the seat with bolt (M8x20) washers, as shown in below Figure.)

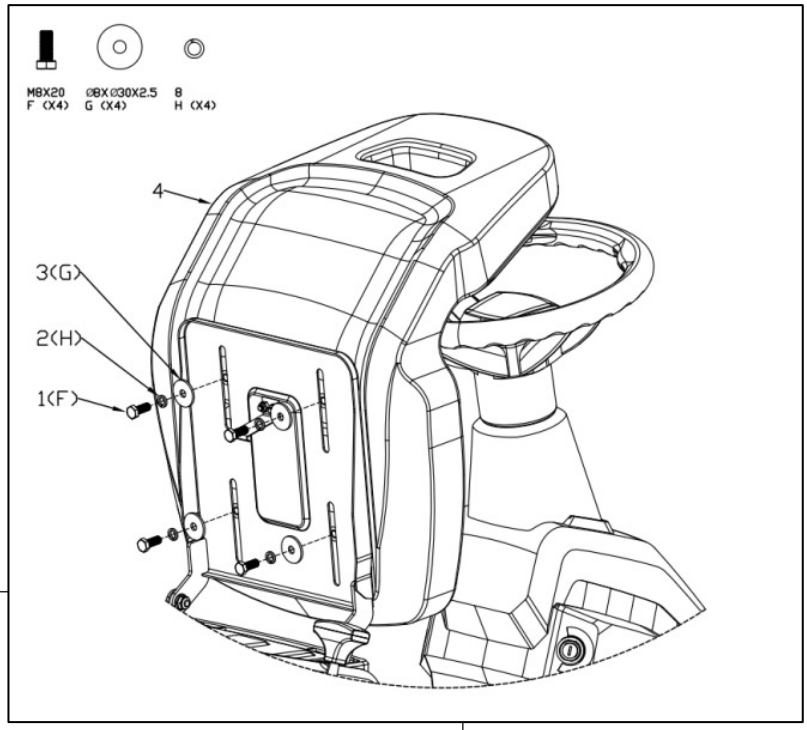

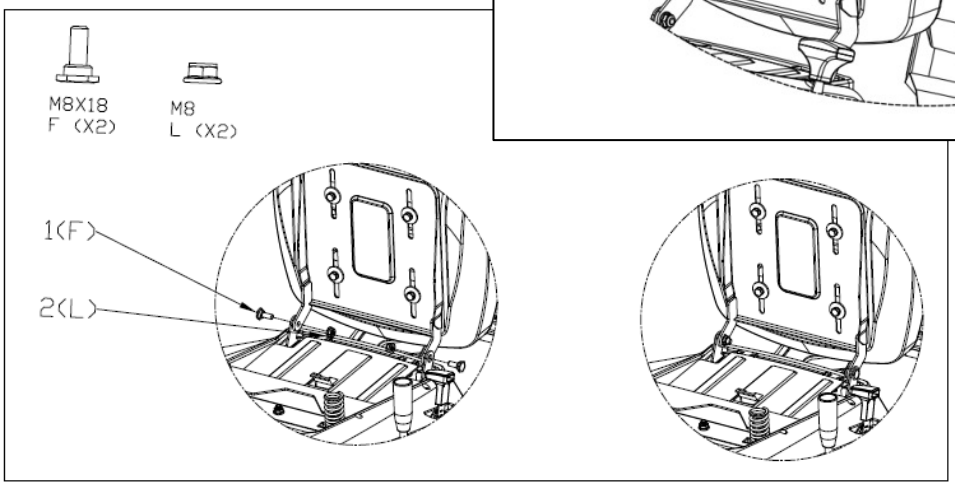

Fix the seat on the machine by bolt (M8x18) and nut (M8).

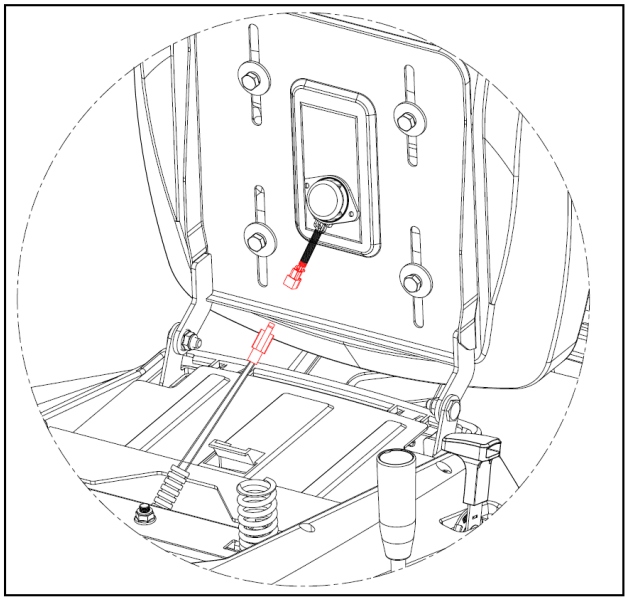

Under the seat, Connecting the switch plug properly.

5. GRASS CATCHER BAG ASSEMBLY

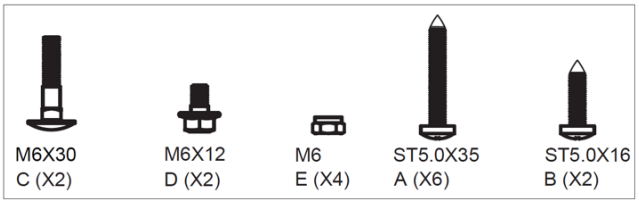

Step 1: Take out the metal frame as below pic.

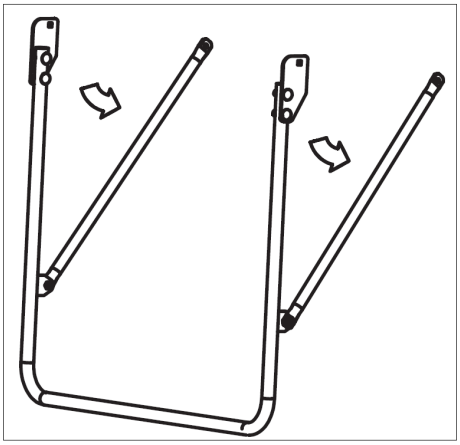

Step 2: Combine the below 2 type of metal frames together as below picture.

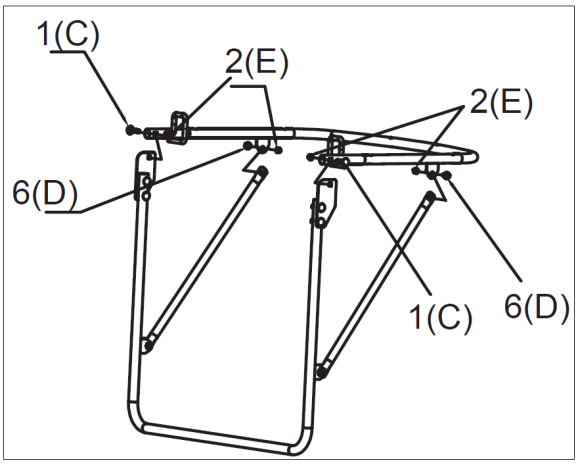

Step 3: Combine the grass bag with the metal frame as shown in the below figure.

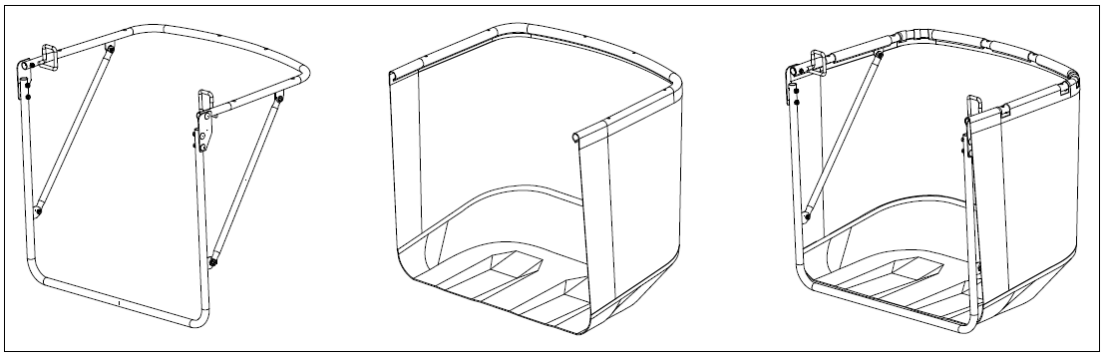

Step 4: Combine the grass catcher and top cover by screws (ST5.0x16 and ST5.0X35).

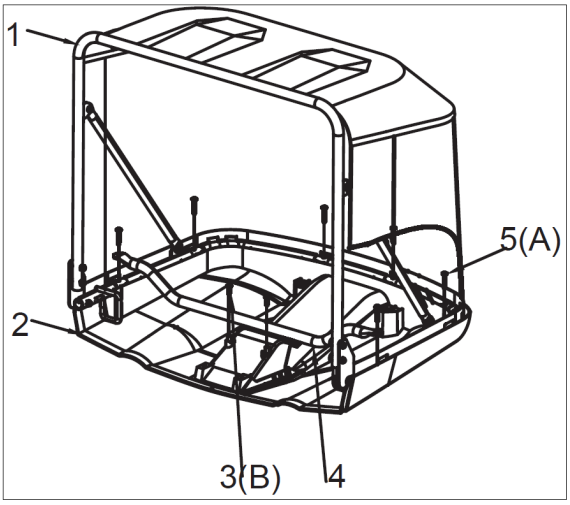

Step 5: There is cutting safety protection switch on rear plate. Whatever function you use side discharge, mulching or rear discharge.

Please note: the grass bag must be installed properly before cutting, otherwise the engine cannot start.

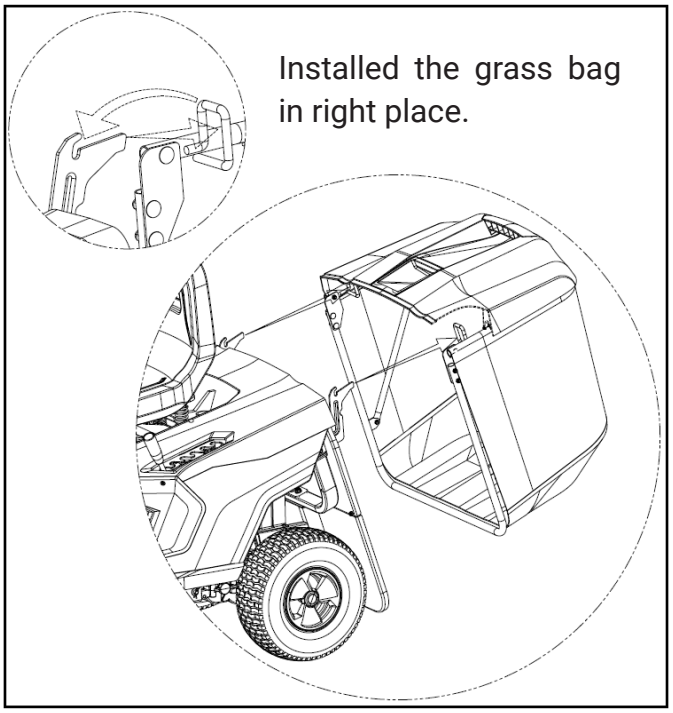

Note: Cutting safety protection switch

6. ASSEMBLY OF THE HANDLE INSTALLATION

Fix the handle as the below pictures.

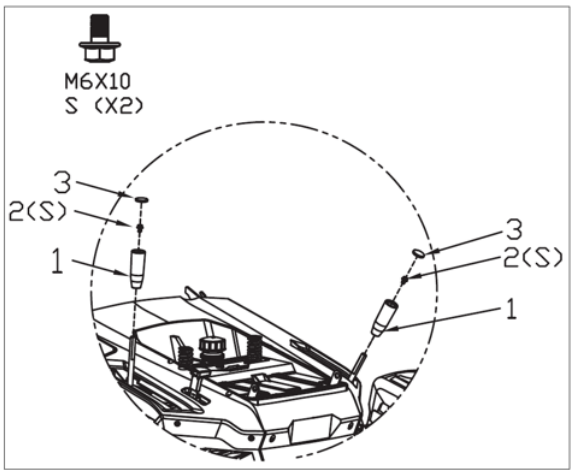

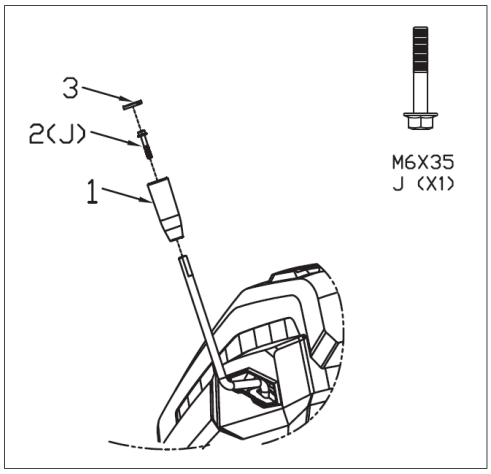

USING THE MACHINE

PRELIMINARY OPERATIONS

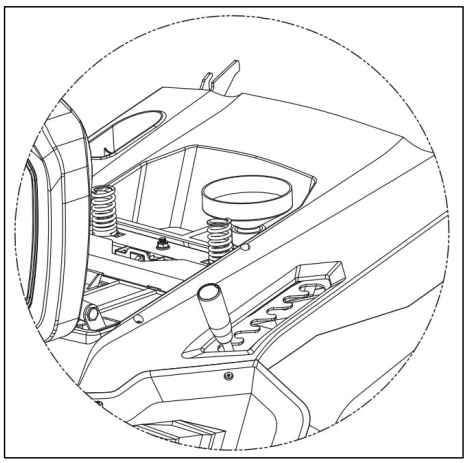

Step 1: Filling with oil and fuel

Check for fuel and oil level before using the machine.

Step 2: Seat adjustment

Adjust through the bolts at the bottom of the seat to select the most comfortable position.

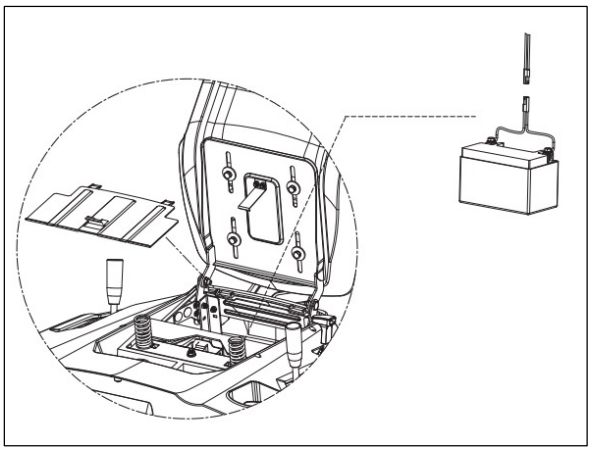

Step 3: Battery cable connection

Connect the battery with the electric system like the pic shows below.

PREPARING THE MACHINE BEFORE STARTING WORK

The machine can be used to mow lawns in many different ways; Before you begin, prepare your machine according to how your lawn will be mowed.

Step 1: Preparation for grass mowing and chopping (mulching function) Install the mulching plug as shown on the below pic

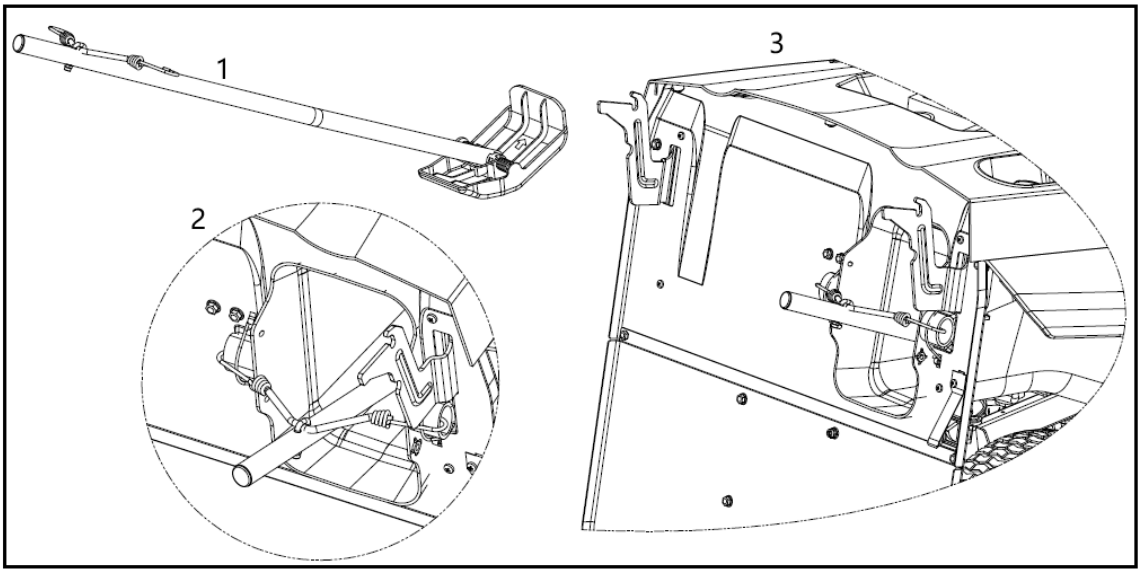

Step 2: Preparation for side-discharge

Lift the side discharge buttons as shown in the figure below, then Fix the side panel. Fix the side discharge device as shown in the figure below.

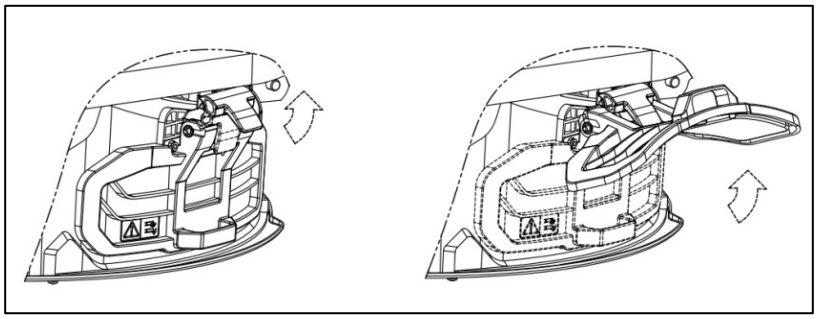

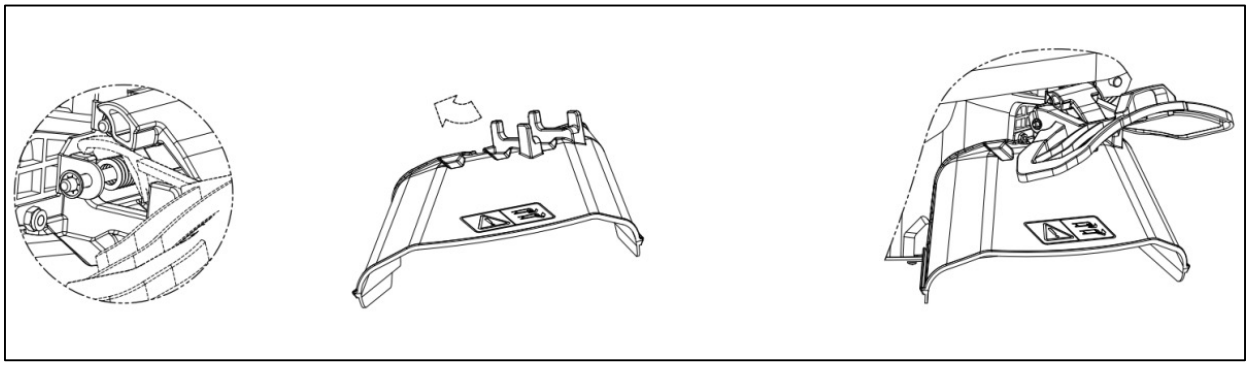

START-UP

Step 1: Sit on the operator's position.

Step 2: Put the drive in neutral as shown in the below figure. (for mechanical type)

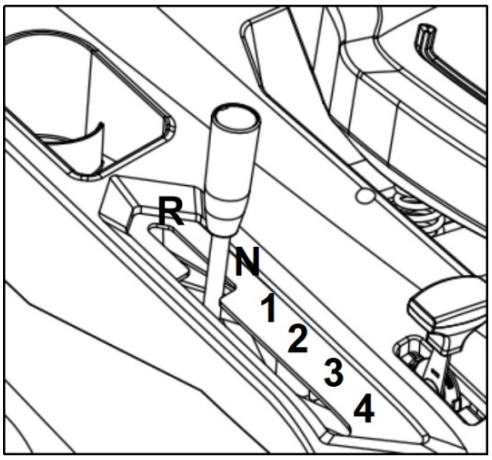

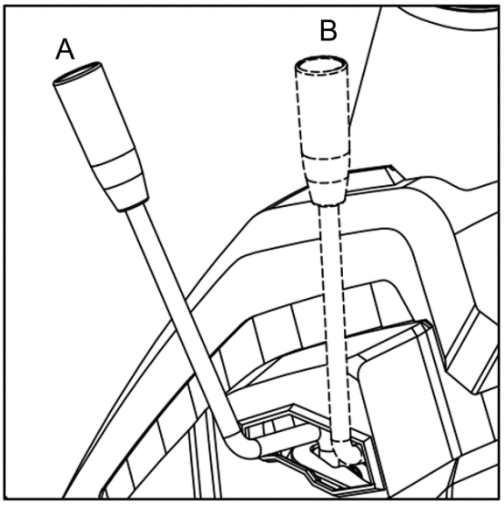

Step 3: Blade clutch at CLOSE "A" position.

Step 4: Engage the brake pedal

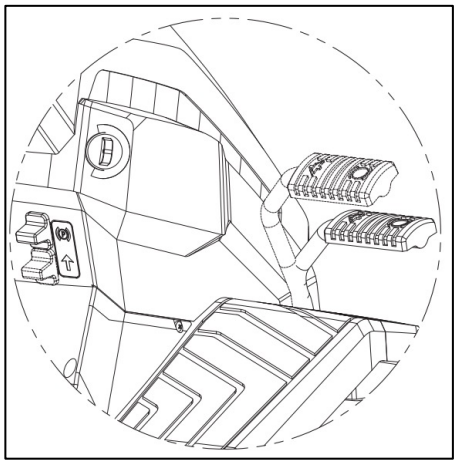

Step 5: Shift the Clutch handle to the start position.

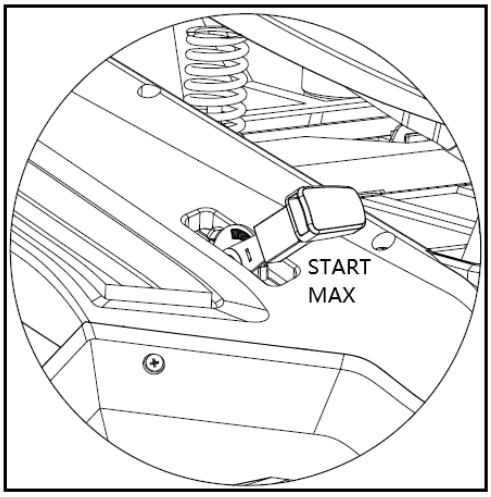

Step 6: Insert the ignition key and turn it to ON for electrical contact, then turn it to start the engine.

Step 7: Release the ignition key after the engine starts.

Step 8: Once the engine is started, switch throttle control to the minimum speed position.

DRIVE WITHOUT CUTTING

Step 1: Adjust the cutting height to the highest position.

Step 2: Switch the Clutch handle to the drive position.

Step 3: Fully press down the brake pedal and move the gear shift lever to the first position (to control the speed according to adjust to different position), then release the brake pedal slowly. (for mechanical type)

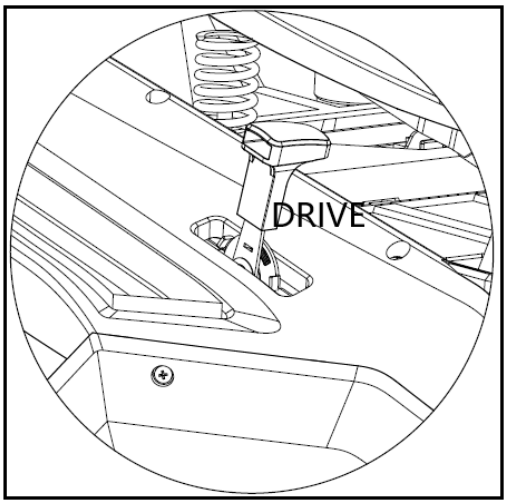

CUTTING

Please note: The grass bag must be installed in the right place before cutting.

Step 1: Adjust the cutting height to the suitable position. The cutting height adjust from 35-75mm, position from 1 to 6.

Step 2: Switch throttle control to the max speed position.

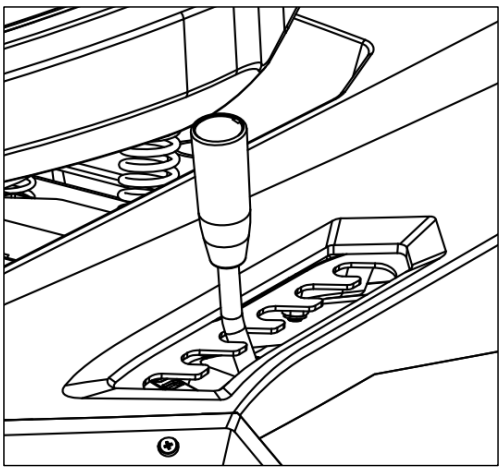

Step 3: Blade clutch at OPEN “B” position.

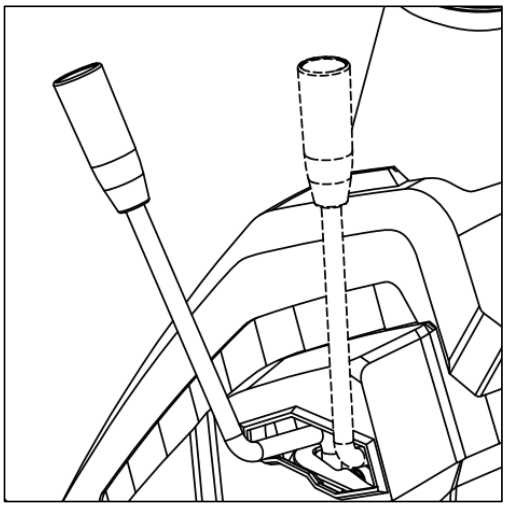

REVERSE CUT

Step 1: Press the brake pedal until the machine stops.

Step 2: Move the gear shift lever to the position “N” (For mechanical model).

Step 3: Blade clutch at OPEN “B” position.

Step 4: Press the “REVERSE CUT” pedal when reverse cutting, for the mechanical model move the gear shift lever to the position “R”.

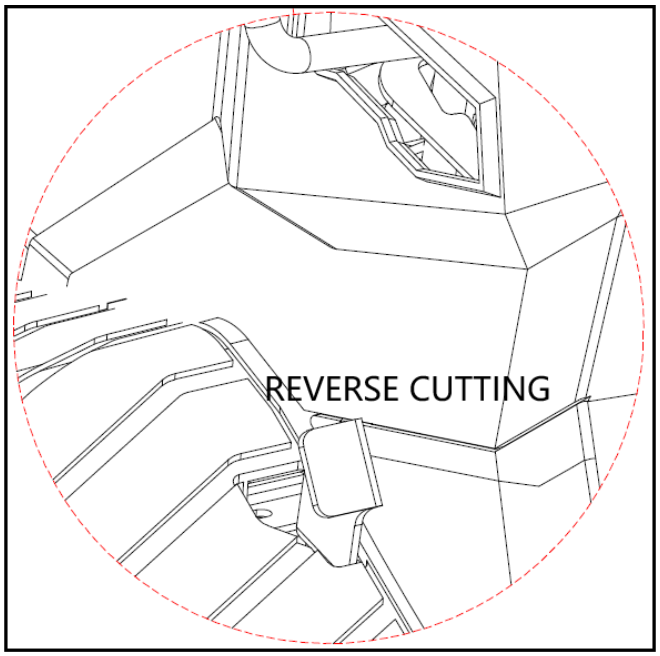

BRAKE

Step 1: Adjust the drive handle at the “N” position.

Step 2: Press the brake pedal to reduce the speed further until it stops the machine.

Step 3: Make the Blade clutch at CLOSE “A” position.

Step 4: Turn the button to the “P” position, then release the brake pedal.

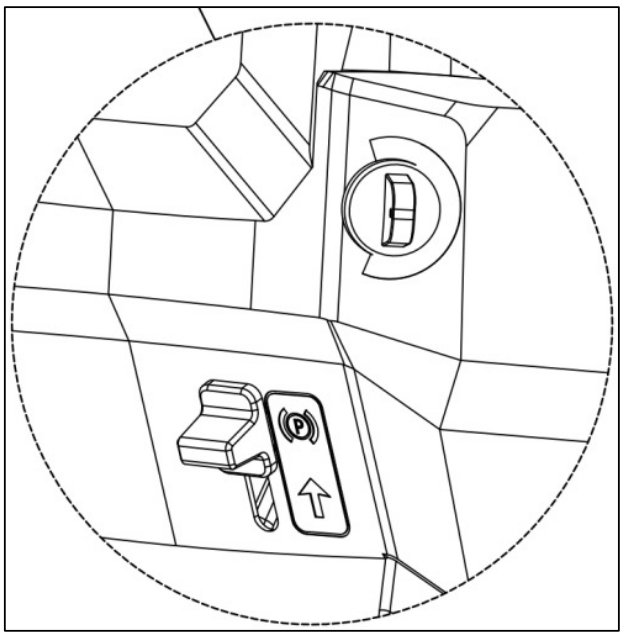

GRASS CATCHER EMPTYING

The grass catcher can only be emptied with the cutting means disengaged; otherwise the engine stops.

Step 1: Reduce engine speed.

Step 2: Engage the parking brake if on slopes.

Step 3: Take hold of the rear lever and tip the grass catcher bag up to empty it.

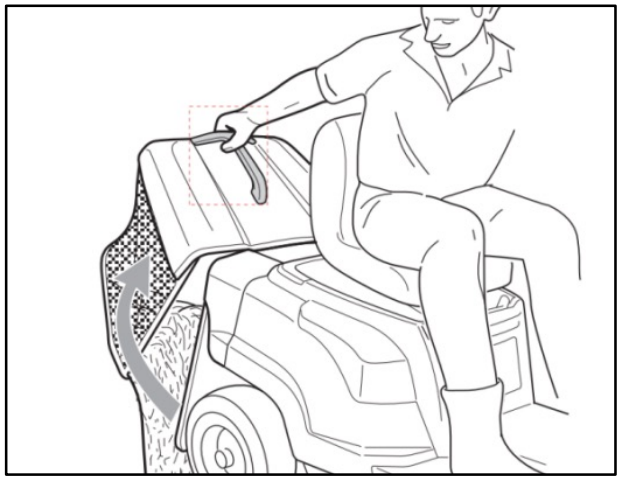

STOP

Step 1: Bring the throttle lever to minimum speed position.

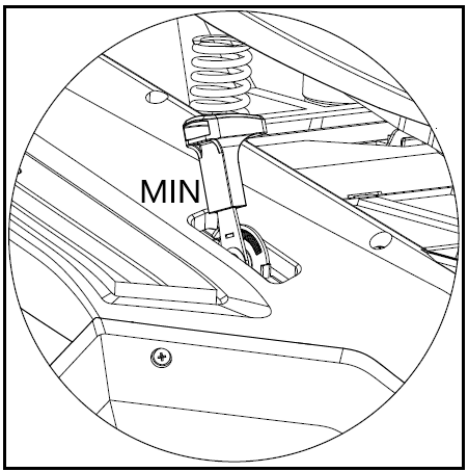

Step 2: Put the drive handle in neutral position (For mechanical type).

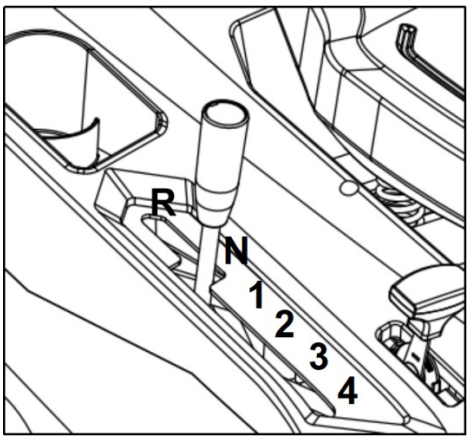

Step 3: Bring the Blade clutch always at CLOSE “A” position.

Step 4: Switch off the engine by turning the ignition key to Off.

Step 5: Remove the key.

AFTER USE

Step 1: Allow the engine to cool before storing in an enclosed space.

Step 2: Clean. Connect the water pipe with the water nozzle to clean the blade and deck.

STORAGE OF BATTERY

The battery must always be stored dry and warm during the winter. Never expose it for low temperatures. Charge the battery completely before storing and then place the lawn rider in a place where it is not exposed to frost. Alternatively cover the battery with a thick carpet or similar, If the rider is in a shed/garage where there may be cold. Charge the battery 1-2 times during the winter (at least every 3rd month), charge the battery 1 time per month at the normal operation time to make sure the battery keeps it full capacity. Incorrect storage can damage the battery and is not covered by warranty.

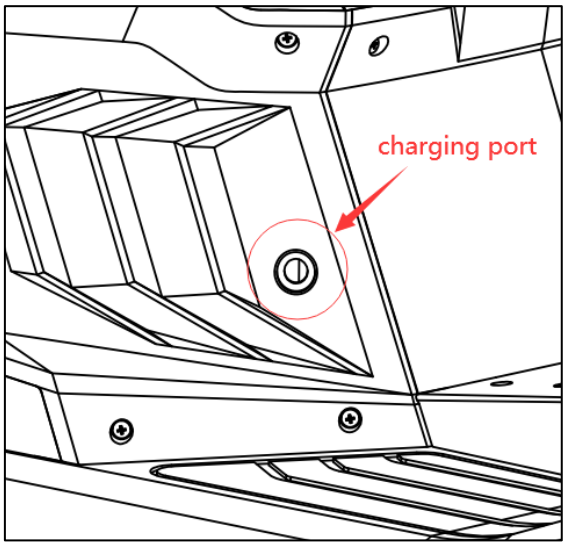

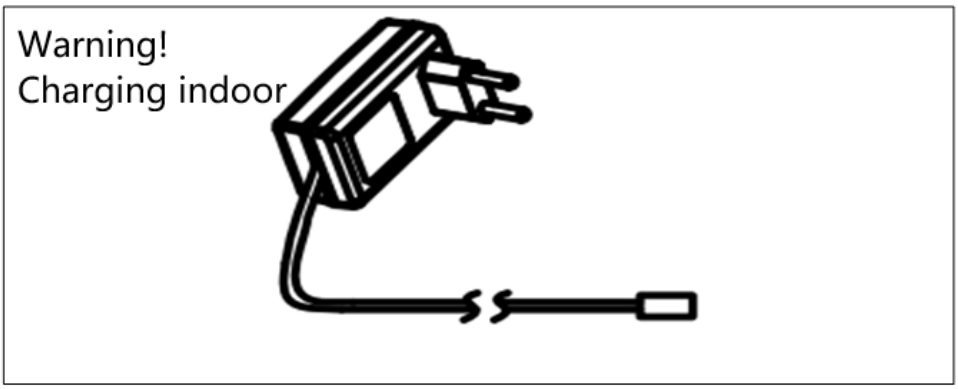

MAINTENANCE

Regular maintenance is the way to ensure the best performance and long life of your machine.

Check all the parts regularly with 1-2 times monthly including blades, etc. Replace the blades as soon as the chipping performance begins to deteriorate. The blunt blades will lower working efficiency and cause the damage of machine.

Please refer to this manual and the engine manufacturer's user manual for maintenance procedures.

⚠ WARNING Before performing any maintenance procedure or inspection, stop the engine, wait five minutes to allow all parts to cool. Disconnect the spark plug wire, keeping it away from the spark plug.

Do not smoke during the following activities. Do not perform work in the vicinity of sparks, flames or open flames.

Never clean the machine with water or a high-pressure cleaner. Water in the machine can cause a short circuit or corrosion. Remove large waste with the help of a soft brush.

ENGINE SERVICE

Refer to the engine manufacturer's user manual for engine maintenance.

MAINTENANCE SCHEDULE

Proper maintenance extends this life of the machine and ensure safe and trouble-free use. Never carry out maintenance work while the motor is running.

Action		Each use	1st month or 20 hrs	Every 3 months or 50 hrs	Every 6months or 100hrs	Every year or 300hrs
Motor Oil	Check	*				
	Replace		*		*	
Spark Plug	Check electrode distance, clean			*		
	Replace					*
Air Filter	Check	*				
	Clean			*(1)	*(1)	
	Replace					*(1)
Fuel Lever	Check and adjust when motor has cooled down					*
Fuel tank and filter	Clean and replace if necessary					*
Fuel line	Check and replace if necessary	*				
Carburetor	Check	*				

(1) More often when used in dusty environments.

SPECIFICATION

Machine:

Model Name	T66RS-D4
Power output	4.5 kW
Engine type	OHV
Engine manufacturer	Loncin
Cylinder displacement	224 cm^3
Engine model	LC1P75F
Engine speed	2800 rpm
Spark plug	TORCH F7RTC
Fuel tank volume	2.5 L
Oil volume(usage)	0.5 L
Cutting width	651 mm
Cutting height min	30 mm
Cutting height max	75 mm
Grass collector capacity	150 L
Grass catcher type	Fabric

Height adjustment	6 positions
Wheel size (front/rear)	13/15 in
Transmission	TREX
Speed forward / backward	Forward up to 9.3 km/h
	Backward is 3 km/h
Side discharge	Yes
Electric start	Yes
Battery capacity / voltage	12 V / 7 Ah
Variable speed (mechanical type)	Yes
	Forward 1: 2.4 km/h
	Forward 2: 4.6 km/h
	Forward 3: 6.9 km/h
	Forward 4: 9.3 km/h
Net weight	135 kg

Battery:

Model name	Maintenance-free lead-acid batteries
Battery data	1 x battery 12V, 7Ah 7HR
Chemical system	Lead-acid
Power supply	12V
Battery model number	6MF7A
Battery production date / batch	See top of battery
Battery manufacturer	Sichuan Liyang Industry Co.,Ltd Yanhuasi Industry Park, Anju District, Suining City, Sichuan, 401320, P.R. China
Email address	415878203@qq.com

TROUBLESHOOTING

The troubleshooting guide below lists the most common problems, causes and remedies.

Difficult to start		
PROBLEM	CAUSE	SOLUTION
Generally difficult to start	Wrong starting procedure	Following the starting instruction in the manual precisely.
The machine will not start when the electric start button is pushed (or the starter “clicks” when attempting an electric start)	The safety switches is not being activated The wires are not connected to battery The brake cable is incorrectly adjusted The machine is standing in high grass Engine brake cable is too loose The choke is not in the correct position No more gasoline in fuel tank The gasoline is more than 3 months old Connection plug filled with grass The fuse is blown	Activate safety switches under the seat and collector bag. Check that the wires are connected from the battery to the motor and start button. Move the machine away from the high grass to start it. Set the height adjustment in the highest position, so that the blade can run freely. Move the choke lever to a different position. Check and fill fuel tank with gasoline. Empty the fuel tank and carburettor from old gasoline, and fill with new gasoline. Remove grass from and around the connection plug Check the fuse and replace it with a new one
No ignition spark (cannot start)	The spark plug cap is loose The spark plug is damp or dirty Incorrect gap between the spark plug and the electrode The air filter is dirty or defective	Check that the cap is firmly attached to the spark plug. Check that there is no dirt on the spark plug. Check and adjust the spark plug gap. Alternatively, replace the spark plug. Check the air filter for dirt and clean it.

The rider starts, but runs unevenly		
PROBLEM	CAUSE	SOLUTION
Insufficient engine revolutions	Lever is in the “Choke” position The throttle lever is set for “Turtle“	Set the lever in the “Run” position Set the throttle lever for “Rabbit”
The back wheels are not pulling, or only very little	The belt is torn or has fallen off Gearbox defect	Replace belt Replace the gearbox
The engine runs irregularly and/ or its performance becomes poor as you are working	The spark plug cap is loose The spark plug is dirty Incorrect gap between the spark plug and the electrode The air filter is dirty or defective Evaporation of fuel in the carburettor Loose throttle cable Dirt in the carburettor	Check that the cap is firmly attached to the spark plug Check that the spark plug is clean and not damaged Check and adjust the spark plug gap Check the air filter for dirt and clean it Wait a few minutes, and then try to start again Tighten the throttle cable Clean the carburettor

BBT AUSTRALIA

OUR PRODUCT RANGE

Wood Log Splitters

Chippers & Mulchers

Chainsaws & Garden Care

Post Hole Diggers & Tillers

Generators & Water Pumps

Outdoor Kitchens & BBQs

Sales & Support: (02) 4257 4787

Location: Albion Park Rail, NSW

NEED HELP, PARTS, OR AN UPGRADE?

Scan a QR code below for instant access:

bbta.com.au

© BBT Australia.