BBT AUSTRALIA

Stump Grinder

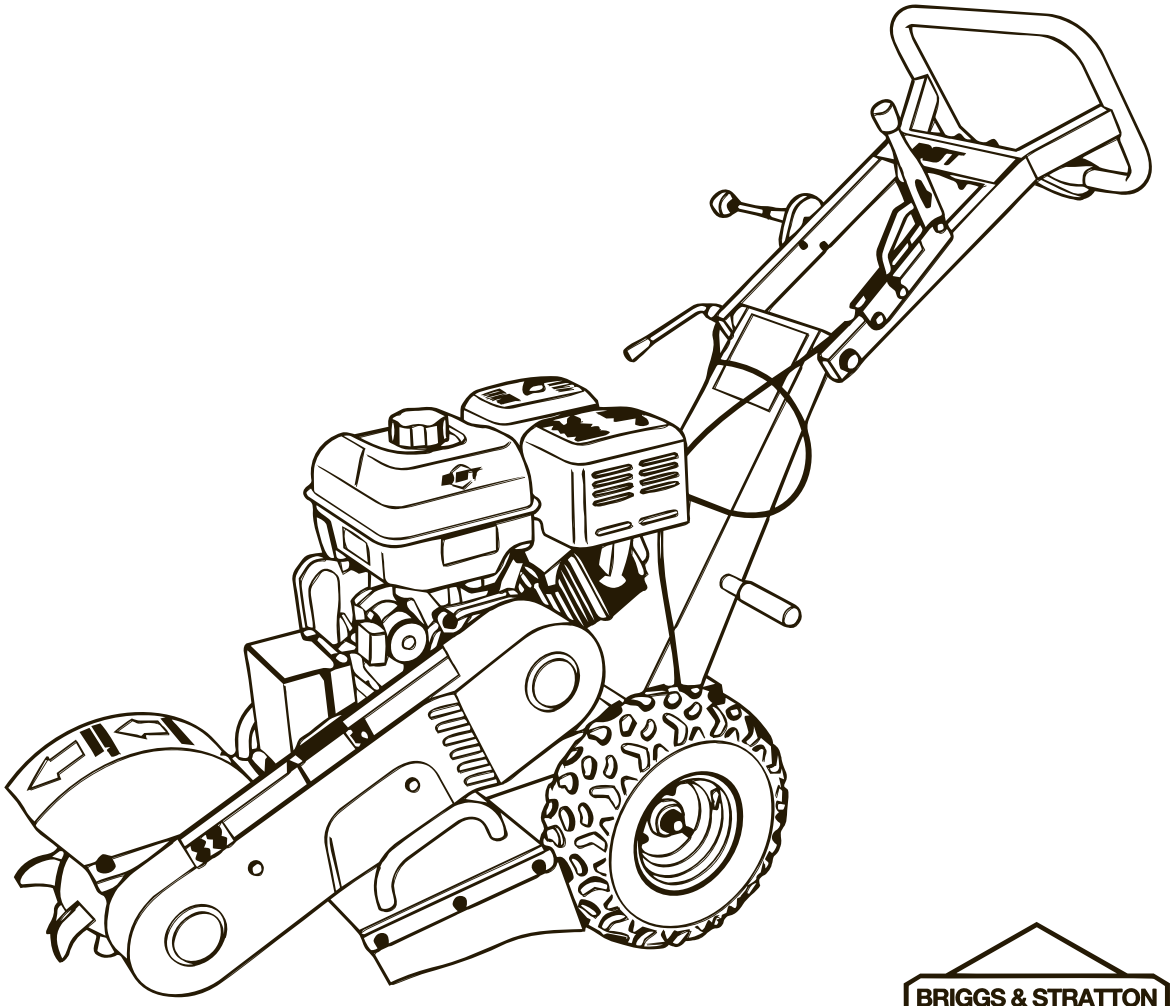

BRIGGS & STRATTON

OWNER'S MANUAL

BBT-SG-BS15

IMPORTANT: Please make sure that the person who is to use this equipment carefully reads and understands these instructions before operating.

Save this manual for future use

Thank you for choosing our equipment. It was carefully engineered to provide excellent performance when properly operated and maintained.

Please read this entire manual before operating the equipment. It instructs you on how to set up, operate, and maintain your equipment safely and easily. Ensure that you and any other persons operating the equipment carefully follow the recommended safety practices at all times, as failure to do so could result in personal injury or property damage.

All information in this manual is relevant to the most recent product information available at the time of printing. Review this manual frequently to familiarise yourself with the equipment, its features, and operation. Please note that this Owner's Manual may cover a range of product specifications for various models. Characteristics and features discussed and/or illustrated in this manual may not be applicable to all models. We reserve the right to change product specifications, designs, and equipment without notice and without incurring obligation.

Customer Support

Before initiating a product return, kindly reach out to our dedicated Customer Support Department at BBT Australia. We are here to assist you.

Phone: 02 4257 4787
Email: bbt@bbta.com.au
Warehouse: Unit 2/3 Delta Place, Albion Park Rail NSW 2527

If you have difficulty assembling the product or have any questions about the controls, operations, or maintenance of the equipment, please don't hesitate to get in touch with our Customer Support Department.

CONTENTS

SAFETY & ALERT SYMBOLS 4

FOR YOUR SAFETY AND THE SAFETY OF OTHERS! 4

ADDITIONAL INFORMATION AND POTENTIAL CHANGES 4

HAZARDS SYMBOLS 5

GENERAL SAFETY 6

OPERATION SAFETY 6

TRANSPORTING SAFETY 6

MAINTENANCE SAFETY 6

ADDITIONAL HAZARDS 7

STORAGE SAFETY 7

CARBON MONOXIDE HAZARD 7

GENERAL INFORMATION 8

APPLICATION 8

ASSEMBLY 10

OPERATION 12

FILLING UP WITH FUEL 12

STARTING THE ENGINE 12

REMOVING STUMP 13

PREPARE THE GRINDER AT THE STUMP 13

CUTTING THE FULL STUMP 14

SHUTTING OFF 14

EMERGENCY STOP 14

MAINTENANCE 15

MAINTENANCE SCHEDULE 16

TRANSPORT 18

STORAGE 18

SPECIFICATION 19

TROUBLESHOOTING 20

REPLACEMENT PARTS LIST 22

WARRANTY 25

SAFETY & ALERT SYMBOLS

FOR YOUR SAFETY AND THE SAFETY OF OTHERS!

Safety precautions should be followed all the time when operating this equipment. Failure to read and understand the Safety Messages and Operating Instructions could result in injury to yourself and others.

This Operating Instructions has been developed to provide complete instructions for the safe and efficient operation of this equipment. Refer to the engine manufactures instructions for data relative to its safe operation.

WARNING: Read and thoroughly understand all instructions in this equipment and on the safety decals before assembling or operating this equipment. Failure to do so may cause serious injury or death. Do not allow anyone to operate this equipment who has not read this manual. As with all power equipment, this equipment can be dangerous if assembled or used improperly. Do not operate this equipment if you have any questions concerning its safe operation. Contact our Customer Support Department for assistance in addressing any queries or concerns.

This SAFETY ALERT SYMBOL identifies important safety messages in this manual. Failure to follow this important safety information may result in serious injury or death.

⚠ DANGER	**DANGER** indicates a hazardous situation which, if not avoided, will result in serious injury or death.
⚠ WARNING	**WARNING** indicates a hazardous situation which, if not avoided, could result in serious injury or death.
⚠ CAUTION	**CAUTION** indicates a hazardous situation which, if not avoided, could result in minor or moderate injury.

ADDITIONAL INFORMATION AND POTENTIAL CHANGES

We reserve the right to discontinue, change, and improve our products at any time without notice or obligation to the purchaser. The descriptions and sections contained in this manual were in effect at the time of printing. Equipment described within this manual may be optional. Some illustrations may not be applicable to your equipment.

⚠ WARNING

Your Responsibility—Restrict the use of this equipment to persons who have read, understood, and will follow the warnings and instructions in this manual and on the machine

SAVE THESE INSTRUCTIONS!

HAZARDS SYMBOLS

Potential hazards associated with the operation of this equipment will be referenced with Hazard Symbols which appear throughout this manual.

	READ THE OWNER'S MANUAL(S) : Read, understand and follow all instructions in the manual(s) before attempting to assemble and operate.
	FACE PROTECTION : Always wear safety goggles or safety glasses with side shields or a face shield when operating this equipment as well as ear protection.
	WEAR GLOVES : Always wear non-slip, heavy-duty protective gloves when operating this equipment.
	WEAR SAFETY FOOTWEAR : Always wear non-slip steel-toed safety footwear when operating this equipment.
	BEWARE OF ROTATING BLADES : This equipment has a rotating cutting blade capable of amputating hands and feet and throwing objects. Keep hands and feet out of openings while machine is running. Failure to observe these safety instructions could result in serious injury or death.
	BEWARE OF FLYING OBJECTS : Beware of thrown objects, which can ricochet causing serious injury to the eyes. Always wear eye & ear protection when operating.
	Never wear loose clothes or long jewellery and keep your long hair secured when operating this equipment. Never operate this equipment in bare feet or sandals.
	CARBON MONOXIDE AND GAS : Exhaust contains poisonous carbon monoxide, a colourless and odourless gas. Breathing exhaust fumes can cause loss of consciousness and may lead to death.
	RESPIRATORY HAZARDS : ALWAYS wear approved respiratory protection when required.
	PETROL OIL : Petrol is extremely flammable and the vapours are explosive. Serious personal injury can occur when petrol is spilled on you or your clothing, which can ignite. In the event of a petrol spill, wash your skin and change clothes immediately.
	BURN HAZARDS : Engine components can produce intense heat. To avoid burns, DO NOT touch these areas while the engine is running or right after operations. Never operate the engine with removed heat shields or guards.
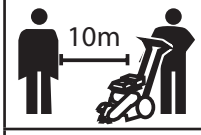	**BYSTANDERS:** Keep bystanders, helpers, pets, and children at least 10m from the equipment while it is in operation. Stop equipment if anyone enters the area.
	SINGLE OPERATOR: Only one person should operate the equipment at a time.
	DO NOT use in the rain.

GENERAL SAFETY

- **Age Requirement:** Do not allow operation by persons under 18 years of age.
- **Protective Clothing:** Always wear protective clothing, including shatterproof glasses and steel-toed boots.
- **Health Check:** Do not operate if you are unwell, fatigued, or under the influence of drugs or alcohol.
- **Proper Protection:** Use respiratory masks, hearing, and eye protection.
- **Decal Visibility:** Replace any unreadable safety decals or nameplates.
- **Attachments:** Use only recommended accessories to prevent damage or injury.
- **High Temperatures:** Let the engine cool before refuelling or servicing. Never touch hot components like the exhaust manifold.
- **Ventilation:** Refuel in well-ventilated areas, away from open flames.
- **Explosive Atmospheres:** Avoid operating near combustible materials.
- **Unattended Operation:** Stop the engine if leaving the equipment unattended.
- **Maintenance:** Keep the equipment in safe operating condition. Service air filters and check all bolts before use.

OPERATION SAFETY

- **Safety Features:** Ensure all guards and safety devices are attached and functional.
- **Environment:** Operate in open, well-lit areas on flat, solid ground. Block wheels to prevent movement.
- **Safety Precautions:** Keep hands away from moving parts and never attempt to operate the controls with your feet. Do not start the engine until the machine is in the cutting position next to the stump. Do not overreach.
- **Overreaching:** Keep proper footing and balance at all times. This allow better control of the machine in unexpected situations.
- **Positioning:** When using the machine, **DON'T STAND IN FRONT OF THE CUTTING WHEEL. PLEASE STAND IN THE HANDLE SIDE, DO NOT EXCEED THE PROTECTIVE AREA BEFORE MAKE SURE THE THROTTLE IS IN THE SLOW SPEED POSITION**.
- **Pre-check:** Check the stumps to be removed for nails, wire, metal fence posts and other metal objects and for stones or other buried obstacles that can be dangerously thrown away or cause unexpected machine movements if they are hit by the cutting wheel.

TRANSPORTING SAFETY

- **Shutting off:** Always follow the normal shutdown procedure before trasporting.

MAINTENANCE SAFETY

- **Pre-service Checks:** Disconnect the spark plug before servicing.
- **Oil Levels:** Always check engine oil levels before operation.

ADDITIONAL HAZARDS

» **Environmental Check:** Ensure no hazardous utilities are in the operating area.

» **Noise:** Use hearing protection to prevent potential hearing loss from noise exposure.

» **Vibration:** Be cautious of repetitive motions and vibrations which could affect hands and arms.

Remember: Always keep the work area clean and free of obstructions. Never operate the equipment if it's in poor condition or without proper safety training and preparation.

STORAGE SAFETY

» **Cleanliness:** Always clean debris and chaff from the engine and muffler areas to prevent fires.

» **Cooling Period:** Allow the equipment to cool for at least ten (10) minutes before storing.

» **Fuel Management:** Always drain the fuel tank prior to storage to eliminate potential fire hazards.

» **Proper Location:** Store equipment in a clean, dry location out of the reach of children.

» **Maintenance Checks:** Ensure all safety features are intact and the equipment is in good repair before storing.

CARBON MONOXIDE HAZARD

» Carbon monoxide is a colorless and odorless gas. Inhaling this gas can cause death as well as serious long term health problems such as brain damage.

» The symptoms of carbon monoxide poisoning can include but are not limited to the following: Headaches, dizziness, nausea, breathlessness, collapsing or loss of consciousness.

» Carbon monoxide poisoning symptoms are similar to flue, food poisoning, viral infections and simply tiredness. It is quite common for people to mistake this very dangerous poisoning for something else.

» To avoid carbon monoxide poisoning DO NOT use Petrol/Diesel powered equipment inside any of the following: Home, garage, tent, camper van, mobile home, caravan or boat. This is not exhaustive and if you are in any doubt contact your dealer.

» If you think you have or someone around you has been affected by carbon monoxide poisoning: Get them fresh air immediately, by leaving the affected area or by opening doors and windows. If safe and practical to do so make sure that the machine is turned off.

» DO NOT enter a room you suspect of have carbon monoxide present- instead call the emergency services.

» Contact a Doctor immediately or go to Hospital - let them know that you suspect carbon monoxide poisoning.

» DO NOT use in an enclosed area or moving vehicle.

GENERAL INFORMATION

APPLICATION

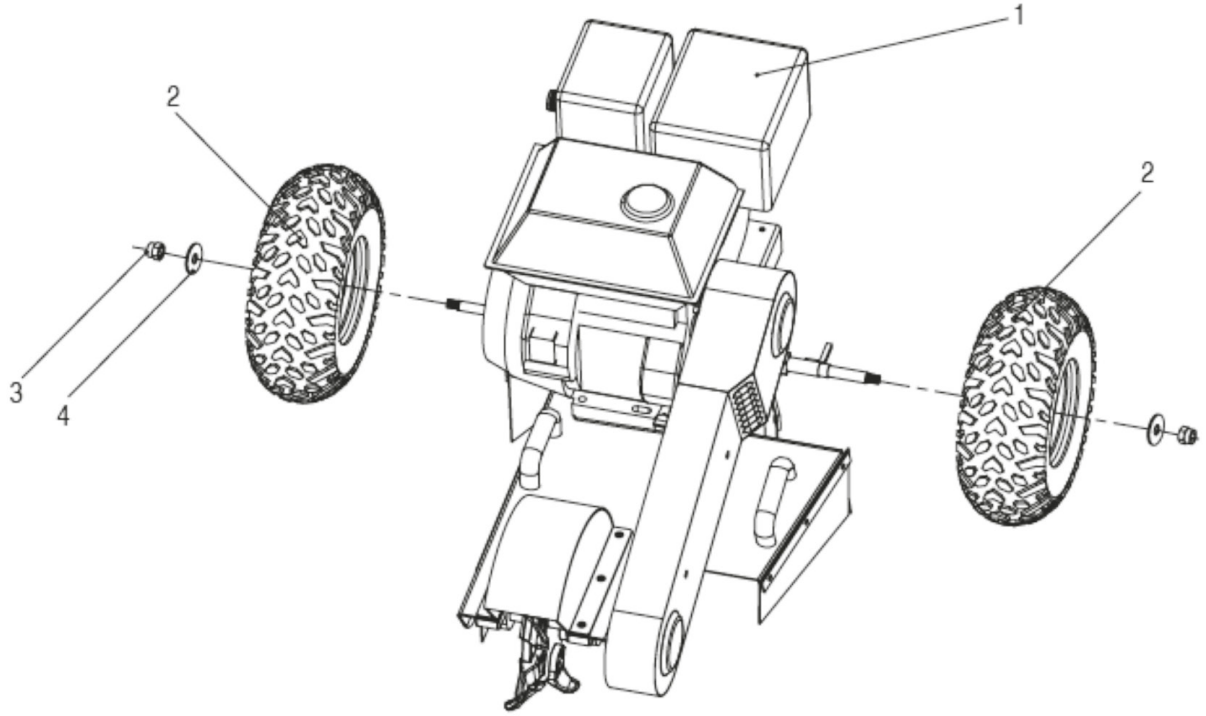

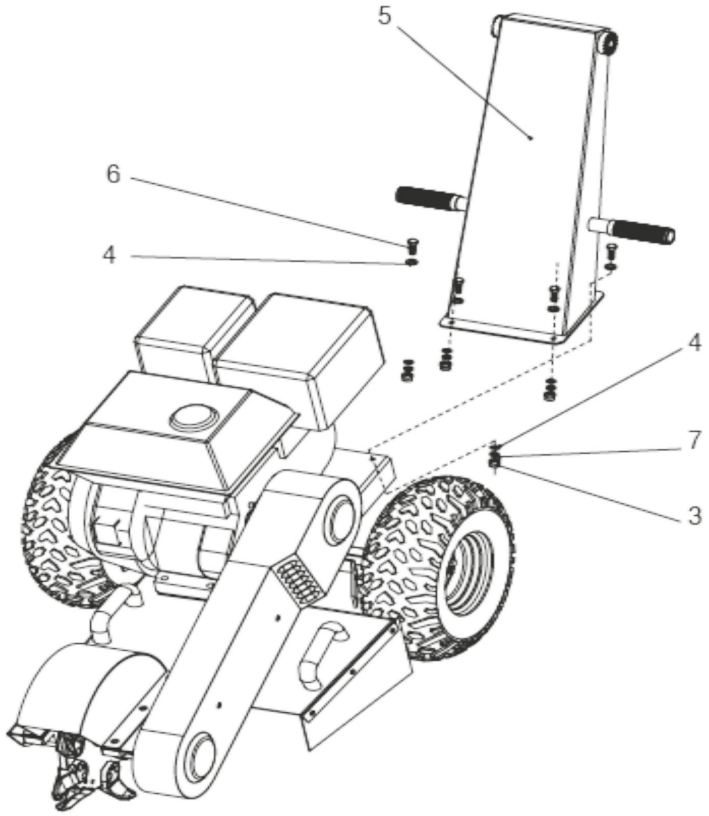

1. **Engine**
2. **Wheel**
3. **Nut**
4. **Washer**
5. **Armrest Base**
6. **Bolt**
7. **Spring Washer**

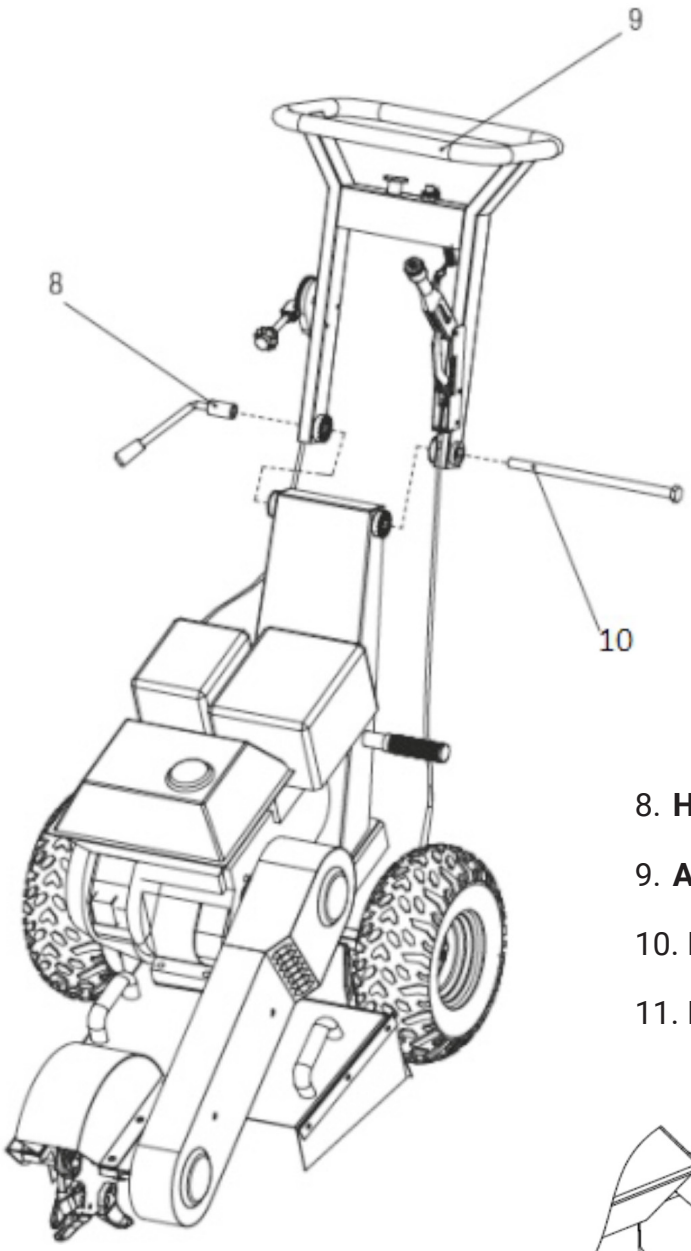

8. **Handle Adjustment Lever**
9. **Armrest**
10. **Handle Bar Bolt**
11. **Front Support Leg**

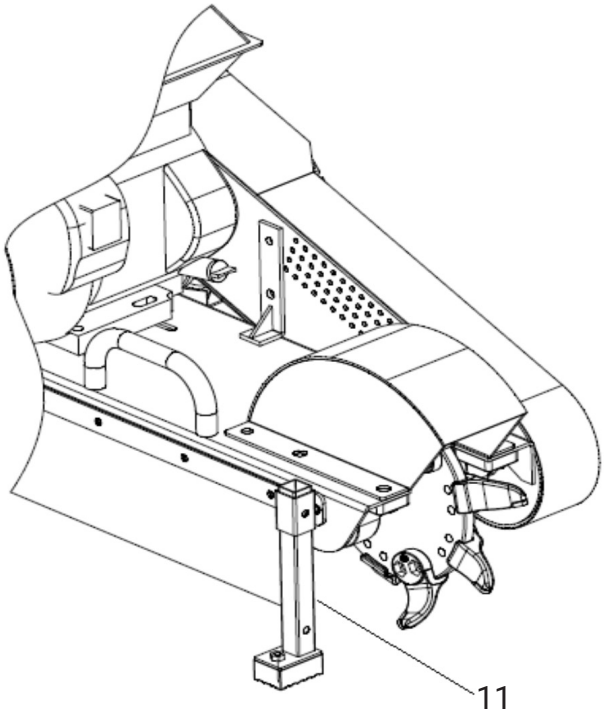

The Stump Grinder is supplied partially assembled. Assemble the machine according to above.

ASSEMBLY

The assembly of this machine requires a minimum of two persons. Ideally, 3 or more people should assist you in the safe and proper assembly.

1. On the wheel axle, detach the bolt and washer. Pivot the machine to the left so that the right wheel can be fitted. Tighten using the washer and bolt with the spanner provided.

2. Before attaching the left wheel, you must attach the brake cable to the brake disc. Thread the brake cable through the catch on the brake disc, as in the pictures below.

NOTE: If you are struggling to connect the brake cable to the brake disc, you may need to slacken the brake. On the brake lever, unscrew the connecting bolt to loosen the cable so it will reach. Follow the next steps to attach the wheel BEFORE re-tightening this bolt.

Warning: Do not attempt to move the machine having not inflated the tyres to the appropriate PSI. Once you have fitted the wheels, inflate before moving on to the next step.

3. Once fitted, plate the Disc Brake onto the axle. Notice how the disc brake slots into place in the picture below.

4. Now fit the left wheel onto the axle. Pivot until the axle protrudes from the wheel bearing and use nut and flat washer to attach, tightening firmly with the spanner provided.

5. Attach the armrest base to the base using 4 angle bolt, nuts, flat washers and spring washers to fit safely. See the pictures below.

6. Attach the Handle Bars by removing the Handle Bolt and Handle Lever. Align the teeth, then use the Handle Lever to tighten firmly. When attaching, take consideration of the cables. Ensure they do not prevent movement or restrict safe action of the machine. See the images below.

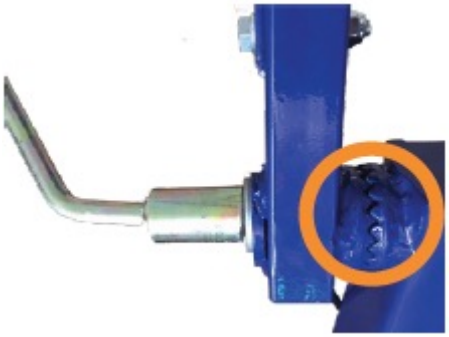

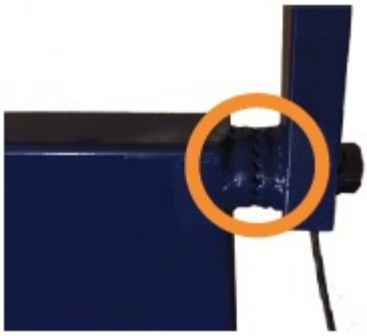

7. Notice the lead out cable that runs from the Emergency Stop switch. At the end of this cable are two wires: one red, one black. The red wire needs to be connected to the plastic cap next to the ON/OFF switch. The black wire is for grounding and MUST be placed beneath a nut. Unscrew slightly a nut located around the engine, carefully place the grounding wire underneath the nut, and tighten firmly. See the images below.

8. Check that all nuts and bolts are fitted firmly and properly. Engage the brake to check that it is working. Notice that the brake only operates the left wheel, the right wheel should move freely.

Before First Use

To reiterate the point previously made in this manual, this machine should only be operated by properly instructed and responsible persons. Inexperienced users should be supervised by experienced individuals. It is strongly advised you work alongside another trained person when operating the machine.

After assembly, ensure once more that all bolts and firmly fitted and no nuts are loose or frayed.

OPERATION

⚠ WARNING

These machines are supplied without fuel and oil. Fill before use, fuel and oil to the correct level. Operating the machine without or with too little oil can cause serious engine damage that is not covered by the warranty.

FILLING UP WITH FUEL

Always use fuel that meets the following specifications: unleaded petrol, minimum octane rating 86.

⚠ WARNING

Never top up with fuel while the machine is running. Allow the machine to cool for at least 15 minutes after filling up before adding fuel.

Do not smoke near the machine or near the fuel. Never add fuel in the vicinity of sparks, flames or open flames.

1. Remove the cover from the filling opening.
2. Carefully pour the fuel into the filling opening. Do not fill the tank beyond the top of the fuel filter.
3. Replace the lid on the filling opening.
4. Filling with the engine oil

   Use 4-stroke engine oil. SAE 10W-30 is suitable for general use at all temperatures. Other viscosity can be used when the average ambient temperature is within it specified ranges.
5. Remove the dipstick from the filling point.
6. Fill the crankcase with the specified amount of oil.
7. Refit the dipstick.

STARTING THE ENGINE

Ensure there are no children or pets within 10 metres of the machine and ensure that any children and /or pets in your surroundings are kept under the watchful eye of a responsible adult.

1. Equip your Personal Protective Equipment.
2. Engage the Brake by pulling the Brake Lever back fully.
3. Ensure that the Throttle is in a slow position for start-up.
4. If the engine is cold, move the Choke Lever toward the Closed position.

⚠ WARNING

The next step may cause the cutting wheel to rotate, keep everyone away.

5. Raise the Cutter Head wheel 4 to 5 inches from the ground by pushing down on the Handle Bar hold it in that position.
6. Pull the Starter Cord until you feel resistance, then pull sharply. Allow the Starter Cord to recoil back by hand.

   Do not allow the rope to snap back, return it by hand to prevent damage to the starter.
7. With the engine running, move the choke lever to Open position. If the engine is cold, allow the machine to sit idly (with the Throttle in the slow position) until it warms up.
8. When engaging the throttle, the Cutter Head wheel will begin to rotate. You are now ready to commence grinding. Read on for how to efficiently tackle the stumps.

REMOVING STUMP

1. Remove all loose pieces of wood, stones, wire, and other debris from the area before beginning stump removal.
2. Wind direction should be considered as this influences the direction in which dust and wood chips are directed.
3. Dig around the earth and remove any stones near the stump that may interfere with your work. Check that the ground is free of foreign objects such as, cables, barbed wire etc.
4. Cut or trim the stump as low to the ground as required using a power saw.
5. Never operate the stump grinder after dark. There will not be adequate lighting for the operator to use the machine safely.
6. Allow a cold engine time to warm up before use.
7. For best results, only use the portion of the cutting wheel within the 80° area shown below.

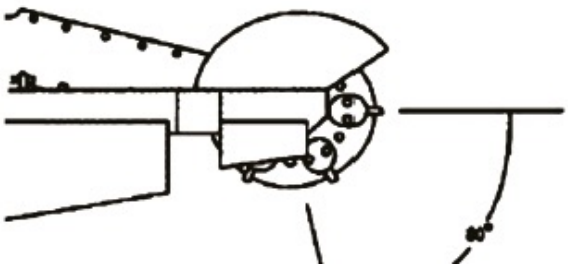

8. Never leave the controls when the cutting wheel is rotating and stop the engine when the machine is left unattended.
9. Use smooth comfortable side to side movements while operating, pivoting the arc on the locked left wheel.
10. When it is desired to cut smaller roots, it may be more effective to do so before rather than after cutting the main stump.
11. Should the chip build-up become excessive when cutting, stop the engine, wait for the cutting wheel to stop rotating, retract the machine from the stump and rake way the chips.
12. To prevent the wheels becoming stuck in the hole. Move the grinder to the other side of the stump to continue removal or by filling the hole with chips before continuing.

PREPARE THE GRINDER AT THE STUMP

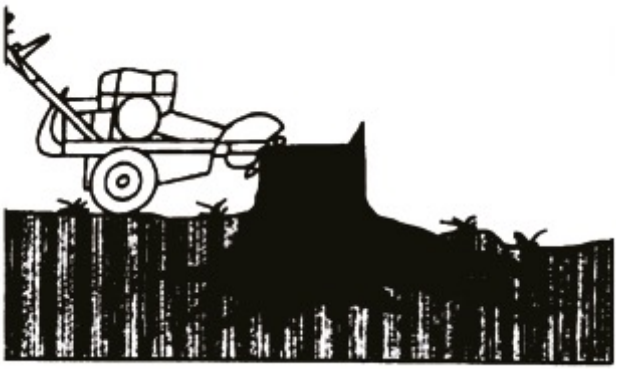

Removing roots

1. Make sure the throttle lever is set to “FAST”
2. Turn the cutting wheel to one side and then lower it into the nearest roots at the base of the stump.
3. Turn the cutting wheel before each movement, until the roots are sufficiently removed.

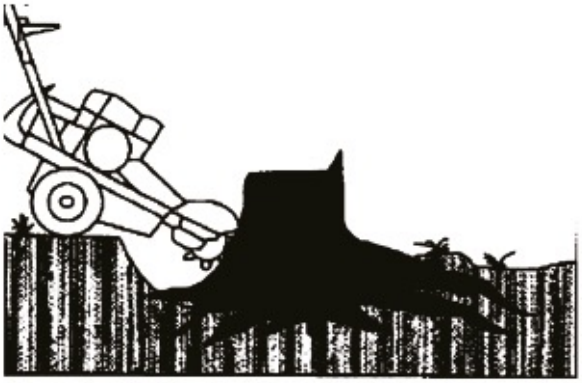

4. Raise the cutting wheel until the center of the cutting wheel is just about the top of the stump.

5. Allow the cutter wheel to stop, release the brake and reposition the machine.

6. Lock the brake again.

CUTTING THE FULL STUMP

7. Make sure the throttle is set to high speed. The cutter wheel will accelerate to cutting speed.

8. Direct the cutter wheel against the stump, beginning with the nearest top corner of the stump and steadily sweep it across the stump left to right, cutting away 1/2" of wood with each sweep.

9. Raise and lower the cutter wheel between sweeps by lowering and raising the control handle.

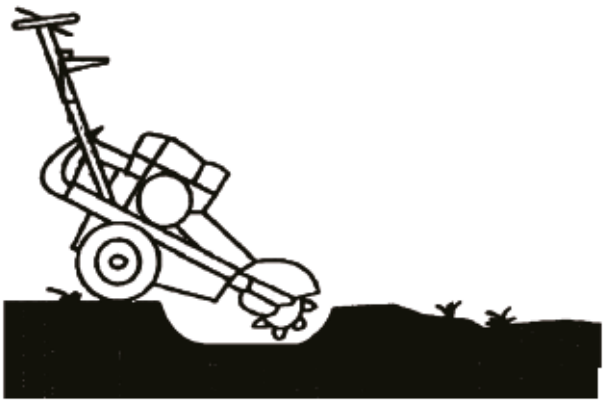

10. Roll the machine forward and back by pushing and pulling on the control handle. To do this, release the park brake. Re-lock it when the machine had been re-positioned and continue cutting.

11. Cut the remaining roots as described until satisfactorily removed.

SHUTTING OFF

For your own safety and that of others, always follow the normal shutdown procedure before leaving the machine unattended for any reason, cleaning, servicing, transporting or inspecting.

⚠ WARNING

Never deviate from this procedure unless specified in this manual or in an emergency situation that requires it.

⚠ WARNING

A rotating cutting wheel is very dangerous. Make sure the cutting wheel has completely stopped before you do anything else.

1. Set the throttle lever to the "SLOW" position.

2. Press the emergency button (on/off) to stop the engine.

3. Set the parking brake.

EMERGENCY STOP

1. Immediately press the emergency button (on/off) to switch off the engine.

2. Ensure that all moving parts come to a complete stop.

3. Pull the brake lever to engage the brake.

4. Rectify the emergency situation and return to normal operation.

MAINTENANCE

ALWAYS stop the engine allow to cool and unplug the spark plug HT lead cap before doing any repairs or maintenance.

Check and maintain the fuel level regularly and check engine oil level daily.

At regular intervals, check the tightness of all nuts, bolts and screws.

If the blade hits and obstacle, check for damage and if the machine vibrates badly, stop the machine and take it to a service dealer.

⚠ CAUTION

ALWAYS fuel and defuel in a well-ventilated are with the engine off and cool.

Whilst carrying out any maintenance you must wear the appropriate Personal Protective Equipment (PPE).

NEVER use a pressure washer or hose pipe to clean your stump grinder. Water can penetrate areas of the machine and cause damage to spindles, pulleys, bearings or the engine.

The use of a pressure washer or hose pipe will result in a shortened life span and reduce serviceability.

Shut down the engine, wait for all moving parts to come to a complete stop, remove the spark plug HT lead cap and wait for 5 minutes before carrying out any maintenance.

NOTE

Only use manufacturer recommended parts when servicing or repairing this machine. The use of non-recommended parts may short the machine lifespan and void the manufacturer's warranty.

MAINTENANCE SCHEDULE

Proper maintenance extends the life of the machine and ensure safe and trouble-free use.

		Each use	1st month or 20 hrs	Every 50 hrs	Every 6 months or 100 hrs	Every year or 300 hrs
Engine Oil	Oil Check	*				
	Replace		*		*	
Air Filter	Check	*				
	Clean			*	*	
Air Filter Carburetor	Replace					*
Float bowl	Clean				*	
Spark Plug	Clean /Adjust				*	
Carburetor Float bowl	Replace					*#
Spark arrester	Clean					*
Idle speed	Check /adjust					*
Valve clearance	Check/adjust					*
Fuel filter	Clean					*
Fuel Tank	Clean					
Fuel lines	Check	Check every 2 years - replace as required.				
Cylinder head	Clean	Every 500hours #				

#-Unless you are mechanically proficient and have the correct tolls, we recommend that these service items are carried out by an authorized service dealer.

1. Make sure all nuts, bolts and screws are tight.
2. Never store the equipment with petrol in the tank inside a building where fumes can reach an open flame or spark. Allow the engine to cool before moving the grinder.
3. To reduce fire hazards, keep the engine and petrol storage area free of grass, dirt and excessive grease.
4. Replace worn or damaged parts for safety. If the fuel tank must be drained, this should be done outdoors.
5. Check the oil level daily and add engine oil if required. Change engine oil every 100 hours of use or every year, whichever comes first.
6. Frequently check the grinder and ensure that all wood, bark and dirt deposits are removed from beneath the deck.
7. Grease the main cutting blade shaft bearings every 20 hours of use. There is a grease nipple on each bearing.
8. Check the tightness of all bolts and screws at regular intervals.
9. If the grinder hits an obstacle violently, stop the grinder and take it to a service dealer for inspection.

AIR FILTER

1. Never let the engine run without and air filter being installed. A dirty air filter element affects the engine performance, increase fuel consumption and makes it difficult to start.

   If you notice a loss of engine power check the air filter. You MUS make sure the housing is free of dust and debris DO NOT allow any dust or debris to enter the carburettor.

2. Remove the air filter cover by unscrewing the air filter cover wing nut and removing the cover.

3. Once the cover has been removed, undo the air filter element wing nut and remove the foam and paper elements.

4. If damaged or worn, replace immediately.

5. Was the foam filter in a mild detergent solution and allow to dry.

6. Once dry, soak the foam in fresh engine oil and remove the excess.

7. Tap the paper element to remove dirt and debris and use a low pressure airline to blow from the inside of the element outwards to remove the remaining dust.

8. Reassemble and reinstall the air filter.

SPARK PLUG

1. The spark plug MUST be fully tightened otherwise the engine will overheat causing damage. ALWAYS complete the following steps after the engine has been turned off and allowed to cool down.

2. To make sure the engine runs correctly a spark plug gap of 0.6-0.7mm must be maintained and the spark plug free of carbon deposits.

3. To remove the spark plug, remove the spark plug HT lead cap and undo the spark plug.

4. Inspect the spark plug and if worn or damaged, replace immediately.

5. Clean any carbon deposits with a soft wire brush and using a feeler gauge, gentle tap the electrode until the correct gap is achieved.

6. Check the spark plug washer for damage and replace if required.

7. Replace the spark plug by hand to avoid cross threading then tighten to a torque of 12 to 15Nm.

ENGINE OIL

⚠ CAUTION

Risk of Burn from hot engine oil. ALWAYS allow engine oil to cool before changing.

1. Drain the engine oil when the engine is warm, not hot. Warm oil drains more effectively.

2. Place a suitable container underneath the oil drain plug.

3. Remove the oil filter cap/dipstick.

4. Undo and remove the oil drain plug and allow the oil to drain into the container. You may need to tilt the machine to drain all the oil, you will require assistance for this.

5. Inspect the oil drain plug and washer and if damaged, replace.

6. Reinstall the oil drain plug.

7. Place the machine of flat level ground and slowly refill with 1100ml of suitable engine oil.

8. Stop occasionally to check the oil level and DO NOT OVER FILL.

9. Refit the oil filter /dipstick.

10. Dispose of the waste engine oil in a safe and correct manner. DO NOT throw waste oil down drains or on to the ground.

11. Clean up an split oil.

TRANSPORT

The stump grinder has been designed to be transported by van or trailer. The machine is equipped with grab bars that are to be used for both lifting the machine and strapping it down. This machine weighs approximately 110kg and may only be lifted using the right equipment or a enough number of people working as a team.

Ensure the machine is supported and strapped down securely to prevent it moving during transport.

DO NOT transport the machine while full of fuel and ensure the fuel tap is in the OFF position.

STORAGE

NOTE: If the machine is to be taken out of use for a longer periods of time, you MUST empty the fuel tank and change the oil. This prevents problems with the restart.

1. Allow the engine to cool completely before storing the machine.

2. Drain the fuel from the fuel tank into a suitable container and then run the machine until it cuts out to drain the remaining fuel from the fuel lines and carburettor.

3. Drain and replace the engine oil as specified in the maintenance section.

4. Remove the spark plug and pour 1 teaspoon of fresh engine oil down the cylinder bore.

5. Place a clean lint from cloth cover the spark plug hole and gently pull the recoil start handle 4 to 5 times to coat the cylinder wall with fresh oil, then refit the spark plug.

6. Clean the machine thoroughly with a damp cloth.

7. Use a silicone based grease and coat the cutting teeth to prevent rust.

8. Lubricate all cables and moving parts of the machine.

9. Top up the grease level at the grease point.

10. Check the tightness of all bolts.

11. Store in a cool, dry place away from sources of ignition.

12. DO NOT stack other items on top the machine.

SPECIFICATION

Engine type	4- Stroke OHV
Displacement	420 cc
Start method	Recoil
Ignition system	CDI
Fuel tank capacity	6.5 L
Oil tank capacity	1.1 L
Brake	Drum Brake
Drive	2PCS V Belt
Clutch	Centrifugal Clutch
Blades	9 Blades with Tungsten Carbide tips (3x left, 3x right, 3x middle)
Diameter cutting wheel	300 mm
Cutting depth below ground	225 mm
Cutting depth above ground	515 mm
Width of the machine	760 mm
Net Weight	110 kg

TROUBLESHOOTING

If troubleshooting does not resolve your issue, then contact the service dealer. Use only parts recommended or supplied by the manufacturer.

ENGINE WILL NOT START: Fuel System

POSSIBLE CAUSES	POSSIBLE CORRECTIVE ACTION
Fuel valve is in CLOSED position	Move the fuel valve to OPEN
Choke OPEN	Move the choke to the CLOSED position
Fuel tank empty	Check and fill with fuel
Machine stored incorrectly	Check and clean the fuel tank, fuel line & Carburettor of sludge
Water in the fuel system	
Carburettor problem	Contact your service dealer

ENGINE WILL NOT START: Spark Plug

POSSIBLE CAUSES	POSSIBLE CORRECTIVE ACTION
Incorrect spark plug	Replace with the correct spark plug
Dirt or carbon build up on electrode	Clean and check spark plug gap, replace if required
Spark plug short circuit	Replace with correct plug
Incorrect plug gap	Check and re-gap the plug to 0.6-0.7mm
Petrol/Oil on spark plug	Clean the spark plug, allow excess fuel to evaporate. Start on full throttle
Faulty engine switch	Contact your service dealer

ENGINE WILL NOT START: Low Compression

POSSIBLE CAUSES	POSSIBLE CORRECTIVE ACTION
Serious internal engine damage	Call your service dealer

Low Fuel

POSSIBLE CAUSES	POSSIBLE CORRECTIVE ACTION
Machine stored incorrectly with regards to emptying the fuel system	Check and clean fuel tank, fuel lines and carburettor of sludge

Engages Late

POSSIBLE CAUSES	POSSIBLE CORRECTIVE ACTION
Loose belt	Tighten the belt
Incorrect cutting depth	Reduce cutting depth

Cutting wheel does not rotate

POSSIBLE CAUSES	POSSIBLE CORRECTIVE ACTION
Insufficient speed	Speed up the engine.
Incorrect belt tension	Re-tension the belt.
Faulty clutch shoes, springs and or clutch bearings	Replace clutch shoes, springs and clutch bearings

REPLACEMENT PARTS LIST

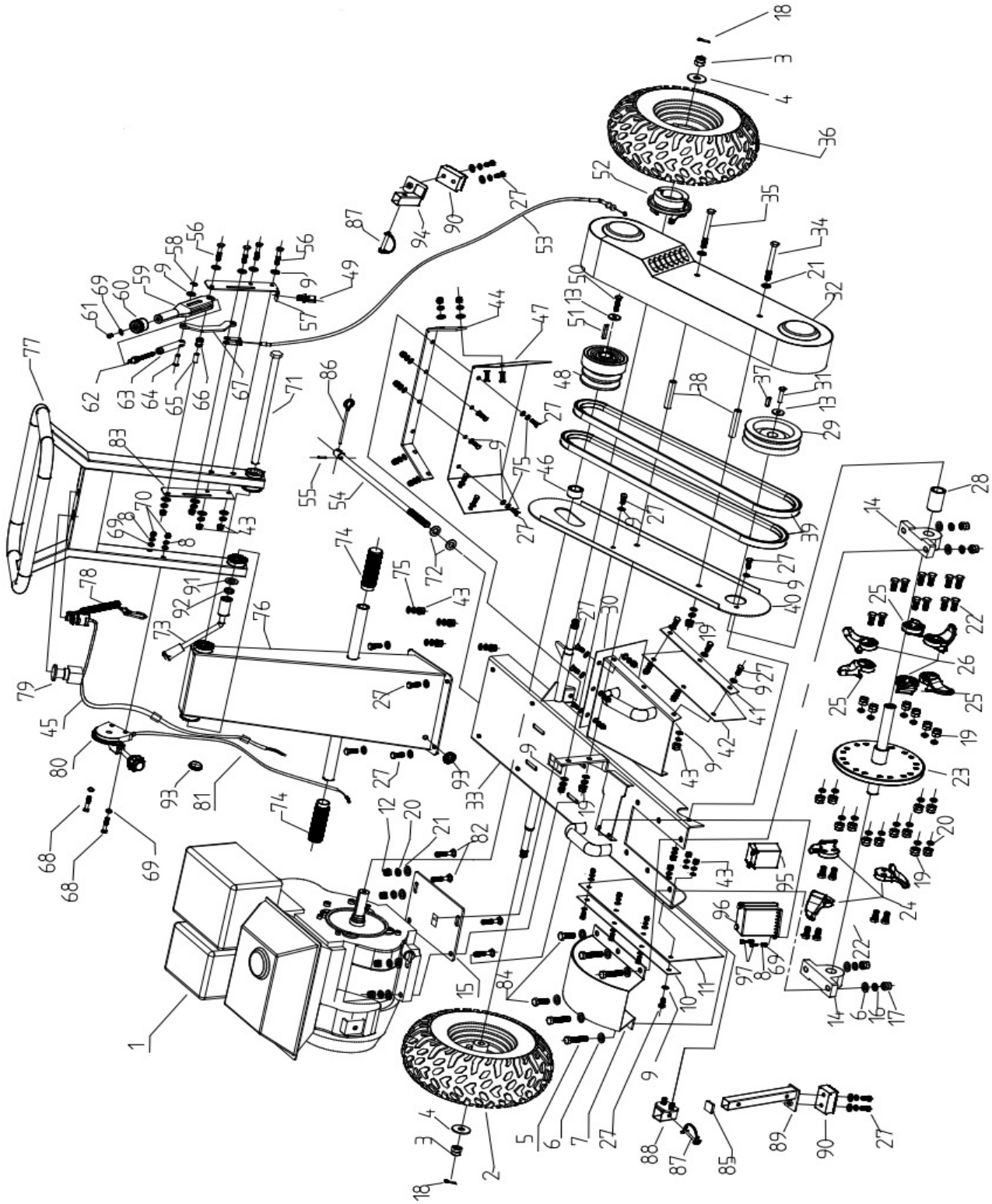

PART#	DESCRIPTION	QYT
1	Engine	1
2	Right Wheel	1
3	Lock Bolt	2
4	Flat Washer	2
5	Bolt	4
6	Flat Washer	12
7	Cutter Protection Cover	1
8	Spring Washer	4
9	Flat Washer	62
10	Long pressure Block	1
11	Long partition	1
12	Lock nuts	4
13	Big Washer	2
14	Vertical Bearing	2
15	Engine Base plate	1
16	Spring Washer	6
17	Lock nuts	8
18	Cotter Pin	2
19	Lock nuts	18
20	Spring Washer	24
21	Flat Washer	8
22	Hex Bolt	18
23	Cutter	1
24	Right Blade (Teeth)	3
25	Straight Blade (Teeth)	3
26	Left Blade (Teeth)	3
27	Hex Bolt	27
28	Side Spacer	1
29	Big Pulley	1
30	Small partition	1
31	Bolt	1
32	Belt Cover	1
33	Base Frame Components	1
34	Hex bolt	1
35	Hex bolt	1
36	Left Wheel	1
37	Flat Key	1
38	Sleever	2

PART#	DESCRIPTION	QYT
39	Belt	2
40	Belt Cover Side Plate	1
41	Short pressure block	1
42	Inclined partition	1
43	Lock nuts	26
44	Bulkhead fixing piece	1
45	Emergency stop switch line	1
46	Engine Spacer	1
47	Bulkhead	1
48	Clutch pulley	1
49	Handbrake wire adjusting bolt	1
50	engine bolt	1
51	Flat key (engine)	1
52	Brake	1
53	Brake cable	1
54	Adjusting screw	1
55	Cylindrical elastic pin	1
56	Bolt	4
57	External mounting plate	1
58	Shaft retaining ring	1
59	handbrake lever	1
60	Cover	1
61	Bolt	1
62	Threaded connecting rod	1
63	connecting pipe	1
64	Shaft pin	1
65	Lined pipe	1
66	Baffle	1
67	Connection board	1
68	Hex bolt	2
69	Flat Washer	7
70	Lock nuts	2
71	Hex bolt	1
72	Flat Washer	2
73	Angle adjustment handle	1
74	Handle cover	2
75	Spring Washer	34
76	Armrest base	1

PART#	DESCRIPTION	QYT
77	Armrest	1
78	Safety rope safety switch	1
79	Emergency stop	1
80	Throttle switch	1
81	Throttle cable	1
82	Bolt	4
83	internal mounting plate	1
84	Bolt	2
85	Square Tube Plug	1
86	Rocker	1
87	D type Pin	2

PART#	DESCRIPTION	QYT
88	Support Leg Seat	1
89	Support Leg	1
90	Rubber mat	2
91	Flat Washer	1
92	Spring Washer	1
93	Protective Ring	1
94	Anti-tilt Support	1
95	Battery	1
96	Battery Cover	1
97	Hex Bolt	2

WARRANTY

This product comes with a 2-year parts warranty for all items used for domestic purposes from the date of purchase. For products used for commercial purposes, the warranty period is 3 months.

Warranty coverage does not include damage caused by normal wear and tear, accidents, misuse, lack of maintenance, neglect, natural disasters, or other external causes. Additionally, damage caused by operating the equipment in a manner outside the described instructions will not be covered. The warranty is considered void if the item has been modified, altered, or tampered with by a person, excluding standard periodic maintenance.

The warranty does not cover consumables such as tyres, blades, belts, brakes, chains, clutches, bearings, and pull starts.

Misuse or Abuse: We do not offer a warranty on items damaged due to misuse, abuse, or infrequent servicing. No refund or exchange will be provided in such instances. Please check each item description for further warranty details, as some specific components of power equipment are not covered. Warranties do not cover consumables such as blades, bars, chains, recoil starters, or issues arising from lack of oil in engines or improper oil-fuel mixtures where required.

Australian Consumer Law: Our goods come with guarantees that cannot be excluded under the Australian Consumer Law. You are entitled to a replacement or refund for a major failure and compensation for any other reasonably foreseeable loss or damage. You are also entitled to have the goods repaired or replaced if they fail to be of acceptable quality and the failure does not amount to a major failure.

Customer Support

For further assistance, kindly reach out to our dedicated Customer Support Department at BBT Australia. We are here to assist you.

Phone: 02 4257 4787
Email: bbt@bbta.com.au
Warehouse: Unit 2/3 Delta Place, Albion Park Rail NSW 2527

BBT AUSTRALIA

OUR PRODUCT RANGE

Wood Log Splitters

Chippers & Mulchers

Chainsaws & Garden Care

Post Hole Diggers & Tillers

Generators & Water Pumps

Outdoor Kitchens & BBQs

Sales & Support: (02) 4257 4787

Location: Albion Park Rail, NSW

NEED HELP, PARTS, OR AN UPGRADE?

Scan a QR code below for instant access:

bbta.com.au

© BBT Australia.