OWNER'S MANUAL

Assembly & Operating Instructions

BRUSH CUTTER

36cc 4 Stroke Engine

Bull Horn Handle

BBT-BC-36-DH

D Handle

BBT-BC-36-BH

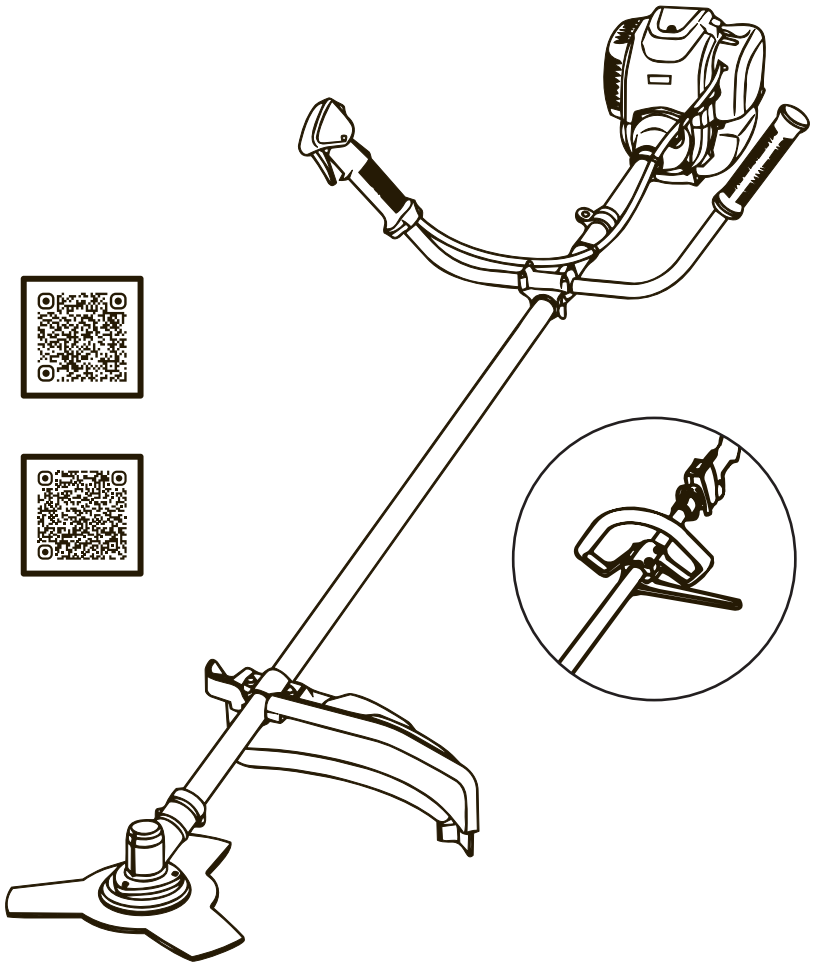

N23701

BIGGER BOYZ TOYZ

Thank you for choosing our equipment. It was carefully engineered to provide excellent performance when properly operated and maintained.

Please read this entire manual before operating the equipment. It instructs you on how to set up, operate, and maintain your equipment safely and easily. Ensure that you and any other persons operating the equipment carefully follow the recommended safety practices at all times, as failure to do so could result in personal injury or property damage.

All information in this manual is relevant to the most recent product information available at the time of printing. Review this manual frequently to familiarise yourself with the equipment, its features, and operation. Please note that this Owner's Manual may cover a range of product specifications for various models. Characteristics and features discussed and/or illustrated in this manual may not be applicable to all models. We reserve the right to change product specifications, designs, and equipment without notice and without incurring obligation.

All the power testing information used to establish the power rating of the engine equipped on this equipment can be found in the engine manufacturer's manual or website. If you encounter any problems or have questions about the equipment, please contact our Customer Support Department.

Throughout this manual, all references to the right and left side of the equipment are observed from the operating position. The engine manufacturer is responsible for all engine-related issues concerning performance, power-rating, specifications, warranty, and service. Refer to the engine manufacturer's Owner's Manual, packed separately with your equipment, for more information.

Customer Support

Before initiating a product return, kindly reach out to our dedicated Customer Support Department at Bigger Boyz Toyz. We are here to assist you.

Phone: 02 4257 4787
Email: bbt@bbta.com.au
Warehouse: Unit 2/3 Delta Place, Albion Park Rail NSW 2527

If you have difficulty assembling the product or have any questions about the controls, operations, or maintenance of the equipment, please don't hesitate to get in touch with our Customer Support Department.

CONTENTS

SAFETY & ALERT SYMBOLS 4

FOR YOUR SAFETY AND THE SAFETY OF OTHERS! 4

ADDITIONAL INFORMATION AND POTENTIAL CHANGES 4

HAZARDS SYMBOLS 5

GENERAL SAFETY 6

OPERATION SAFETY 6

CARBON MONOXIDE HAZARD 7

SPECIFIC SAFETY INSTRUCTIONS FOR THE BRUSH CUTTER 7

PARTS LOCATION 8

ASSEMBLING GUIDE 9

INSTALLING CUTTING LINES 9

INSTALLING THE BUMP FEED (LINE) HEAD 10

FITTING THE 3-TOOTH METAL BLADE 11

ATTACHING THE SAFETY GUARD 11

ATTACHING THE BELLHOUSING AND THROTTLE CABLE 12

INSTALLING BULL HORN HANDLE 14

INSTALLING D–HANDLE 14

RULES OF SAFE OPERATION 15

BEFORE OPERATION 20

FUEL FOR 4-STROKE ENGINE 21

OPERATION 23

STARTING COLD ENGINE 23

MAINTENANCE 25

AIR FILTER 26

CHECK SPARK PLUG 26

FUEL FILTER 27

ADJUSTING CARBURETTOR 27

MUFFLER 27

TROUBLE SHOOTING 28

ENGINE DOES NOT START 28

ENGINE LACKS POWER 29

ADDITIONAL PROBLEMS 30

SPARE PARTS LIST 32

36CC ENGINE 32

36CC BRUSH CUTTER SHAFT 34

WARRANTY 35

SAFETY & ALERT SYMBOLS

FOR YOUR SAFETY AND THE SAFETY OF OTHERS!

Safety precautions should be followed all the time when operating this equipment. Failure to read and understand the Safety Messages and Operating Instructions could result in injury to yourself and others.

This Operating Instructions has been developed to provide complete instructions for the safe and efficient operation of this equipment. Refer to the engine manufacture's instructions for data relative to its safe operation.

WARNING: Read and thoroughly understand all instructions in this equipment and on the safety decals before assembling or operating this equipment. Failure to do so may cause serious injury or death. Do not allow anyone to operate this equipment who has not read this manual. As with all power equipment, this equipment can be dangerous if assembled or used improperly. Do not operate this equipment if you have any questions concerning its safe operation. Contact our Customer Support Department for assistance in addressing any queries or concerns.

This SAFETY ALERT SYMBOL identifies important safety messages in this manual. Failure to follow this important safety information may result in serious injury or death.

⚠ DANGER	**DANGER** indicates a hazardous situation which, if not avoided, will result in serious injury or death.
⚠ WARNING	**WARNING** indicates a hazardous situation which, if not avoided, could result in serious injury or death.
⚠ CAUTION	**CAUTION** indicates a hazardous situation which, if not avoided, could result in minor or moderate injury.

ADDITIONAL INFORMATION AND POTENTIAL CHANGES

We reserve the right to discontinue, change, and improve our products at any time without notice or obligation to the purchaser. The descriptions and sections contained in this manual were in effect at the time of printing. Equipment described within this manual may be optional. Some illustrations may not be applicable to your equipment.

⚠ WARNING

Your Responsibility—Restrict the use of this equipment to persons who have read, understood, and will follow the warnings and instructions in this manual and on the machine

SAVE THESE INSTRUCTIONS!

HAZARDS SYMBOLS

Potential hazards associated with the operation of this equipment will be referenced with Hazard Symbols which appear throughout this manual.

	READ THE OWNER'S MANUAL(S) : Read, understand and follow all instructions in the manual(s) before attempting to assemble and operate.
	FACE PROTECTION : Always wear safety goggles or safety glasses with side shields or a face shield when operating this equipment as well as ear protection.
	WEAR GLOVES : Always wear non-slip, heavy-duty protective gloves when operating this equipment.
	WEAR SAFETY FOOTWEAR : Always wear non-slip steel-toed safety footwear when operating this equipment.
	BEWARE OF ROTATING BLADES : This equipment has a rotating cutting blade capable of amputating hands and feet and throwing objects. Keep hands and feet out of openings while machine is running. Failure to observe these safety instructions could result in serious injury or death.
	BEWARE OF FLYING OBJECTS : Beware of thrown objects, which can ricochet causing serious injury to the eyes. Always wear eye & ear protection when operating.
	Never wear loose clothes or long jewellery and keep your long hair secured when operating this equipment. Never operate this equipment in bare feet or sandals.
	CARBON MONOXIDE AND GAS : Exhaust contains poisonous carbon monoxide, a colourless and odourless gas. Breathing exhaust fumes can cause loss of consciousness and may lead to death.
	RESPIRATORY HAZARDS : ALWAYS wear approved respiratory protection when required.
	PETROL OIL : Petrol is extremely flammable and the vapours are explosive. Serious personal injury can occur when petrol is spilled on you or your clothing, which can ignite. In the event of a petrol spill, wash your skin and change clothes immediately.
	BURN HAZARDS : Engine components can produce intense heat. To avoid burns, DO NOT touch these areas while the engine is running or right after operations. Never operate the engine with removed heat shields or guards.
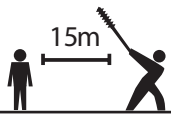	**BYSTANDERS:** Keep bystanders, helpers, pets, and children at least 15m from the equipment while it is in operation. Stop equipment if anyone enters the area.
	Never cut off branches over your head. The cut-off branches may hit you and cause serious injury.
	DO NOT use in the rain.

GENERAL SAFETY

This equipment is primarily designed for versatile garden and agricultural maintenance. Powered by a high-performance petrol engine, the unit offers maximum portability and freedom of movement, allowing the operator to work effectively in various outdoor environments without being restricted by power cords or fixed site conditions.

This manual must be carefully read and fully understood by the operator before using this equipment to avoid unnecessary damage and injuries. In this manual, we focus on the safety matters, structural characteristics, main technical parameters, working process, use instructions, maintenance, installation, handling storage, troubleshooting and other aspects of the equipment, and also equipped with a sketch to show operator the necessary usage and maintenance knowledge for reference.

- **Age Requirement:** Do not allow operation by persons under 18 years of age.
- **Protective Clothing:** Always wear protective clothing, including shatterproof glasses and steel-toed boots.
- **Health Check:** Do not operate if you are unwell, fatigued, or under the influence of drugs or alcohol.
- **Proper Protection:** Use respiratory masks, hearing, and eye protection.
- **Decal Visibility:** Replace any unreadable safety decals or nameplates.
- **Attachments:** Use only recommended accessories to prevent damage or injury.
- **High Temperatures:** Let the engine cool before refueling or servicing. Never touch hot components like the exhaust manifold.
- **Ventilation:** Refuel in well-ventilated areas, away from open flames.
- **Explosive Atmospheres:** Avoid operating near combustible materials.
- **Unattended Operation:** Stop the engine if leaving the equipment unattended.
- **Maintenance:** Keep the equipment in safe operating condition. Service air filters and check all bolts before use.

OPERATION SAFETY

- This equipment cannot be used for any other purposes that not stated in the user manual.
- Only original machines and parts are allowed. Safety risk will be increased by using non-approved parts,which is not allowed. We are not responsible for any accidents or damages caused by the use of non-original parts.
- You must use it under the proper guidance of a dealer or someone who has experience in using it in the first time.
- Minors are not allowed to touch and use this machine.
- This machine can only be lent to people who are familiar with the machine and have a reasonable knowledge of its usage,together with safety and operating instructions.
- Check carefully if all the safety protection parts of the machine are installed in place and confirm all the fasteners are firm and reliable before using the machine.

- Choose a suitable flat working area before using this machine. This machine can only be used outdoors. The fuel of this machine is petrol, which is flammable and explosive, operation and maintenance must be away from the fire, prevent static electricity and flammable and explosive materials to avoid burns, slide, fire, explosion, and other safety accidents.
- When using this machine, you must wear durable gloves, goggles, ear muffs, dust mask and non-slip shoes,and wear tight clothing to avoid personal injury caused by becoming entangled in the machine.
- Stop operation before any adjustment, refueling, cleaning. (Note: Do not smoke while refueling.)
- Check whether the equipment has good support to ensure stability when it works. (Note: Do not work on slopes, must be placed on a flat solid ground.)
- Proper maintenance must be carried out before and after use, which can avoid the occurrence of some safety accidents and extend the service life of the machine.
- Read and understand this manual and related safety matters carefully before operating, otherwise it may cause injury or damage!

CARBON MONOXIDE HAZARD

- Carbon monoxide is a colorless and odorless gas. Inhaling this gas can cause death as well as serious long term health problems such as brain damage.
- The symptoms of carbon monoxide poisoning can include but are not limited to the following: Headaches, dizziness, nausea, breathlessness, collapsing or loss of consciousness.
- Carbon monoxide poisoning symptoms are similar to the flu, food poisoning, viral infections and simply tiredness. It is quite common for people to mistake this very dangerous poisoning for something else.
- To avoid carbon monoxide poisoning DO NOT use Petrol/Diesel powered equipment inside any of the following: Home, garage, tent, camper van, mobile home, caravan or boat. This is not exhaustive and if you are in any doubt contact your dealer.
- If you think you have or someone around you has been affected by carbon monoxide poisoning: Get them fresh air immediately, by leaving the affected area or by opening doors and windows. If safe and practical to do so make sure that the machine is turned off.
- DO NOT enter a room you suspect of have carbon monoxide present- instead call the emergency services.
- Contact a Doctor immediately or go to Hospital - let them know that you suspect carbon monoxide poisoning.
- DO NOT use in an enclosed area or moving vehicle.

SPECIFIC SAFETY INSTRUCTIONS FOR THE BRUSH CUTTER

- **Avoid Blade Thrust (Kickback):** Kickback occurs if a metal blade hits a solid object it cannot cut. To avoid this, cut on the side of the tree that falls away from the unit, and never force the blade.
- **Nylon Head Safety:** Use only nylon monofilament line of the proper diameter (e.g., 2.4mm - 3.0mm). Never substitute wire or wire-reinforced line, as it can break off and become a dangerous projectile.
- **Shielding:** Never operate without the debris shield properly mounted to deflect thrown rocks or debris.
- **Restricted Blade Uses:** Do not use a steel blade for edging or scalping the ground.

PARTS LOCATION

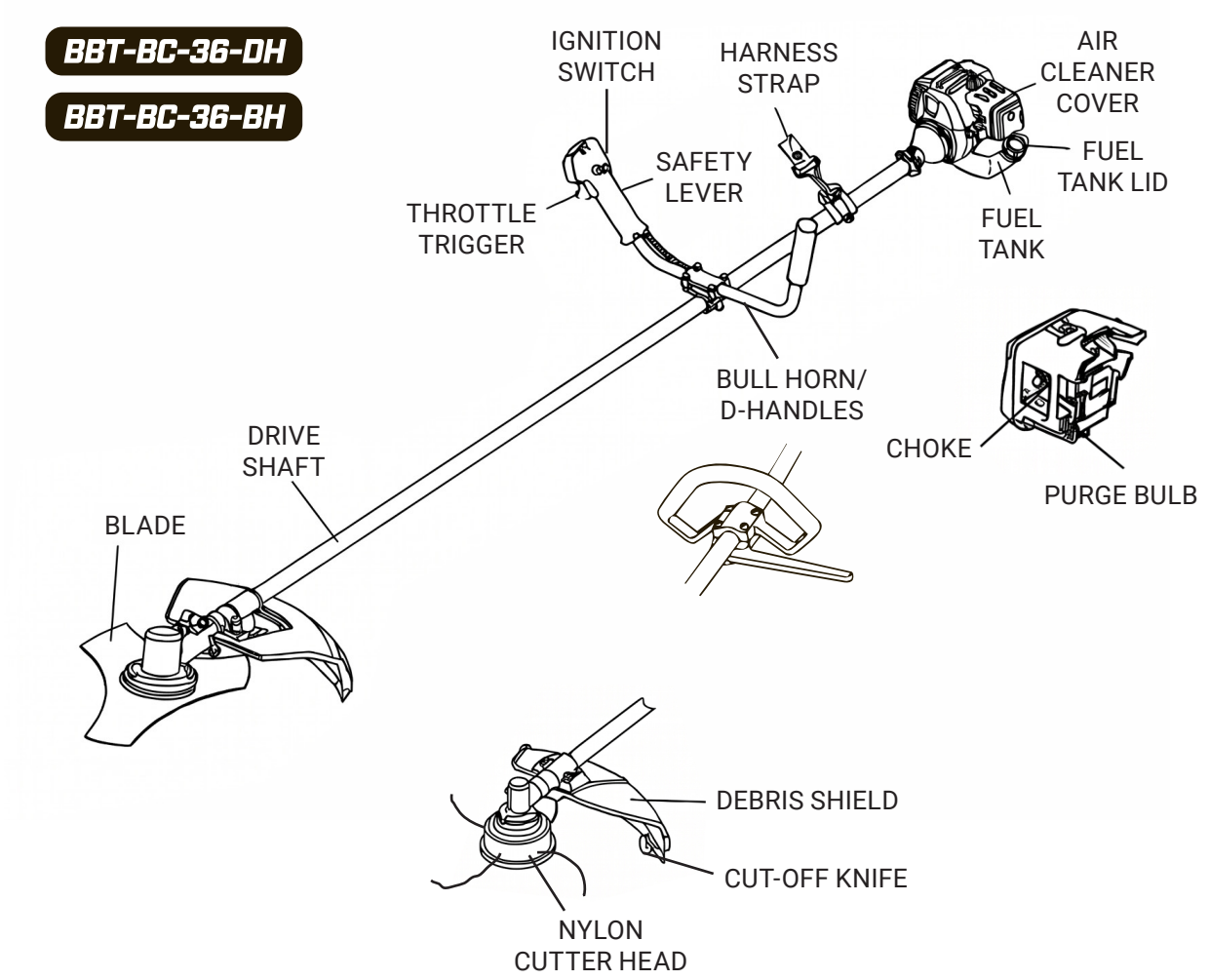

INSTALLING CUTTING LINES

PREPARATION

Line Size: Use a standard professional-grade trimmer line (usually 2.4mm to 3.0mm).

Length: Cut a length of approximately **30cm** for each segment.

1. Look at the face of the cutting head. You will see an arrow indicating the direction the line should be fed. This ensures the line interacts with the internal gears correctly.

2. Insert the tip of the line into one of the eyelets on the side of the head.

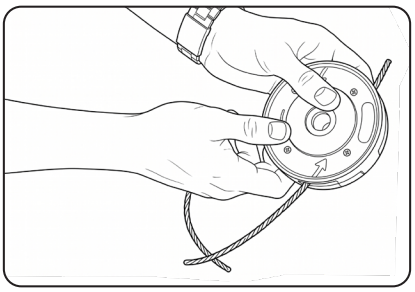

Important: Ensure the spined/textured side of the line is engaging the ratchet mechanism.

As you push the line in, you should feel and hear a clicking noise. This means the ratchet is grabbing the line so it won't fly out during use.

3. Push the line through until about **10-15mm of excess** line is sticking out of the opposite (non-cutting) side of the head.

Pro-Tip: This small excess "tail" is what you will use to pull the line through once it becomes worn out.

4. Rotate it to the second eyelet and repeat the process. Ensure both lines are securely clicking into place.

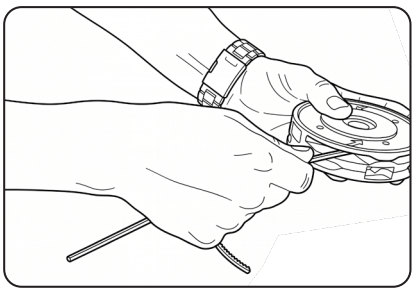

Removing Spent Line

When the line has worn down and is too short to cut effectively:

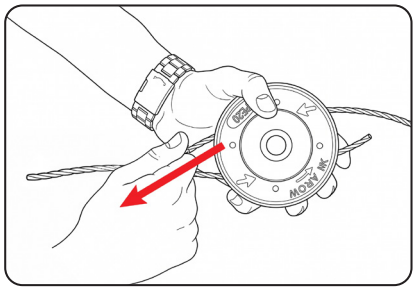

1. Grasp the 10mm tail on the non-cutting side.

2. Pull it firmly straight through. The internal ratchet is designed to let the line slide through in one direction only.

3. Insert a fresh piece of line as described in Step 2.

INSTALLING THE BUMP FEED (LINE) HEAD

Engine Off: Ensure the spark plug lead is disconnected or the battery is removed before handling cutting attachments.

Lock the Rotor: Always insert a screwdriver or Allen key into the hole on the gear housing to stop the shaft from spinning during installation.

1. Locate the small hole on the side of the gear housing. Insert a screwdriver or Allen key into it and rotate the shaft until the tool drops in deeper, locking the shaft so it cannot spin.

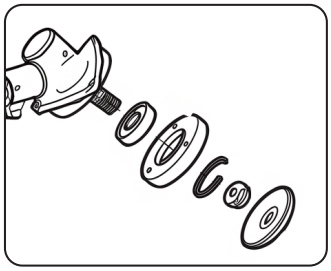

2. Slide the large gold-colored spacer onto the shaft.

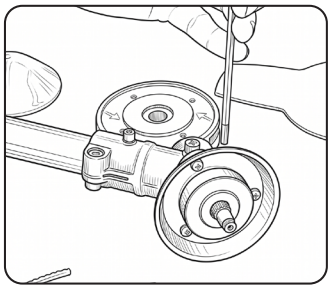

3. Take the bump feed head and turn it counter-clockwise onto the threaded shaft.

4. Hand-tighten the head firmly while keeping the rotor locked.

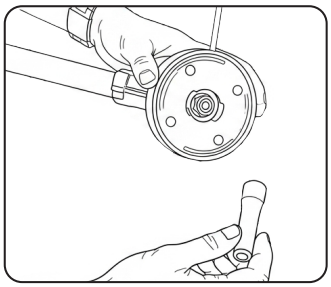

Latest workshop videos are available on our website. Visit our Workshop Resources page to learn more. https://bbta.com.au/pages/workshop-resources

FITTING THE 3-TOOTH METAL BLADE

1. Insert your locking tool.

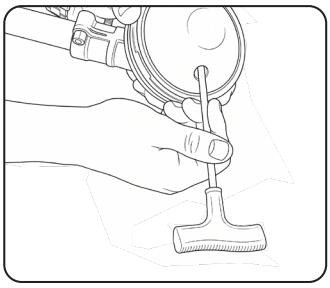

2. Slide the bottom spacer onto the shaft. Ensure the raised lip is facing toward you.

3. Place the 3-tooth blade onto the spacer. Critically important: The blade must sit perfectly flush on the spacer's raised center lip.

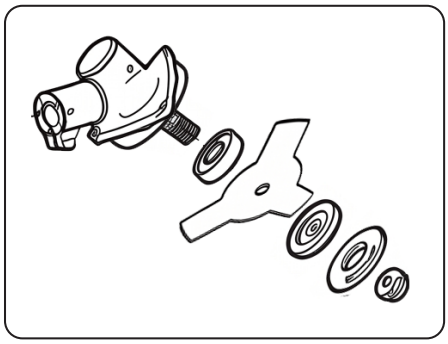

4. Place the top spacer over the blade. Place the protective bell cap (skid plate) over the spacer.

5. Thread the nut on by turning Counter-Clockwise.

6. Use the socket wrench to tighten the nut securely while the rotor remains locked.

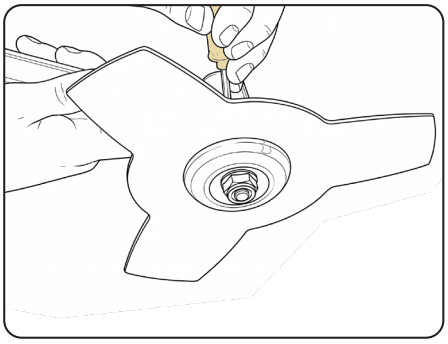

ATTACHING THE SAFETY GUARD

Required for all operations to prevent debris injury.

1. Slide the red guard over the bottom of the pole near the gear head.

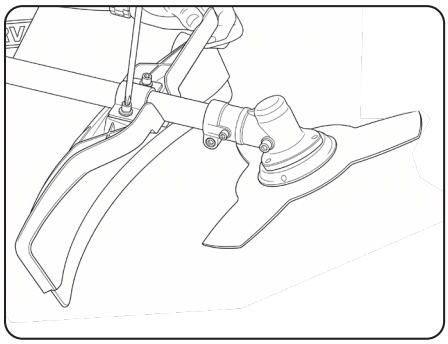

2. Place the metal mounting bracket over the pole, aligning it with the pre-drilled holes in the guard

3. Insert the two bolts and tighten them firmly with a screwdriver. The guard should not move or rattle.

ATTACHING THE BELLHOUSING AND THROTTLE CABLE

Attaching the Bellhousing

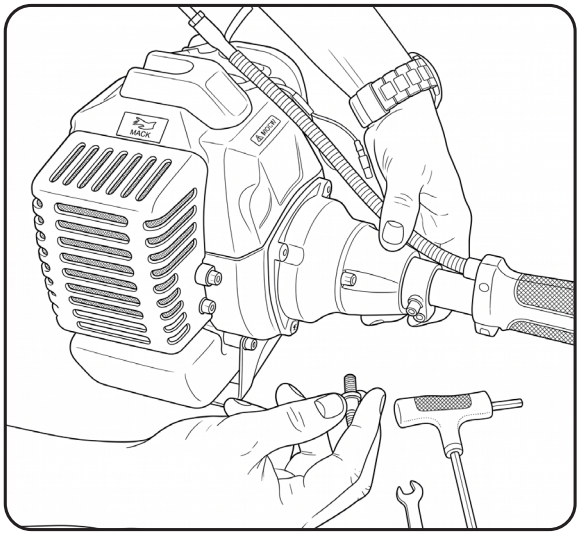

1. Take the first section shaft (with the bellhousing attached) and line it up with the engine unit.

2. Slide the bellhousing onto the engine unit. Insert the four mounting bolts into the corresponding holes.

3. Using the provided T-handle Allen key, tighten all four bolts. Ensure they are firmly secured to prevent the shaft from vibrating loose during use.

Connecting the Throttle Cable

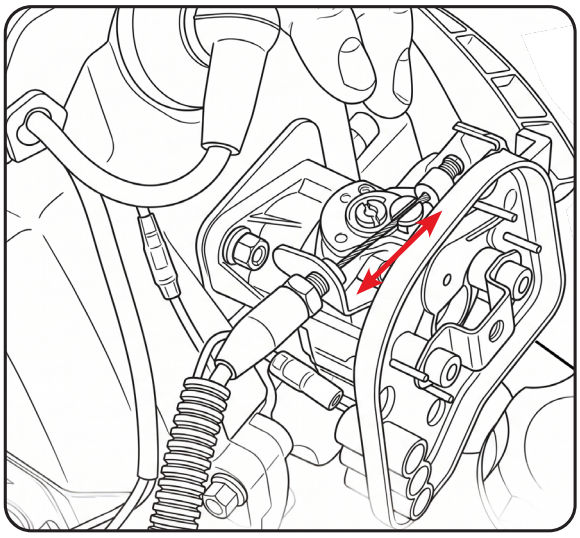

4. Unscrew the knob on the air filter housing and remove the cover. This gives you better access to the carburetor throttle control.

5. Screw the threaded end of the throttle cable into the bracket opening on the engine.

6. Insert the “bullet” end of the inner throttle cable into the recessed slot on the carburetor’s throttle swivel.

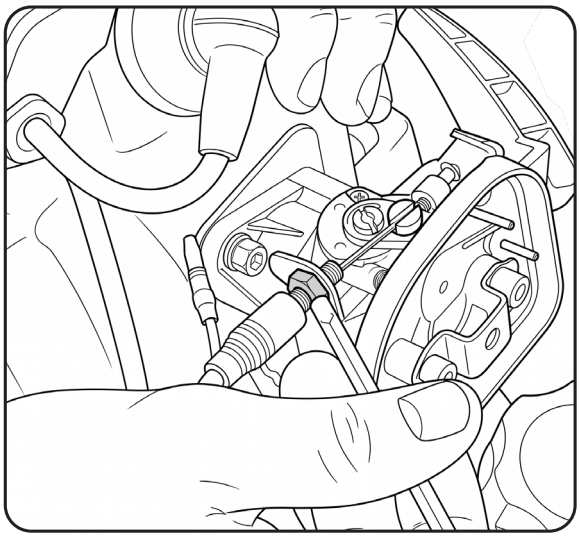

7. Ensure the cable sits snugly in the recess. If adjusted correctly, there should be no significant slack in the cable when the trigger is at rest.

8. Once positioned, tighten the locking nut against the bracket using a small wrench to prevent the cable from vibrating out of adjustment.

Electrical Connections and Final Assembly

1. Locate the two wires coming from the handle and the two from the engine.

2. Connect the wires male-to-female. Note: Wire colors may not always match up exactly; simply ensure each wire from the handle is connected to a corresponding wire on the engine.

3. Bundle the connected wires and the throttle cable together neatly. Use a plastic cable tie to secure them to the engine housing.

4. Use a pair of cutters to snip off the long tail of the cable tie.

5. Place the foam air filter back into position, replace the plastic cover, and tighten the securing knob.

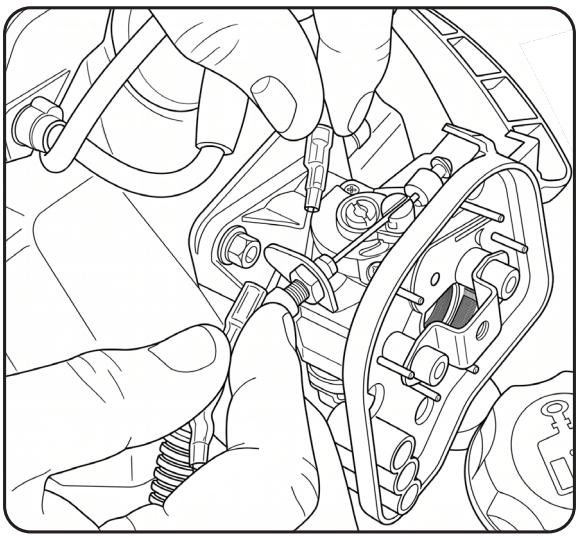

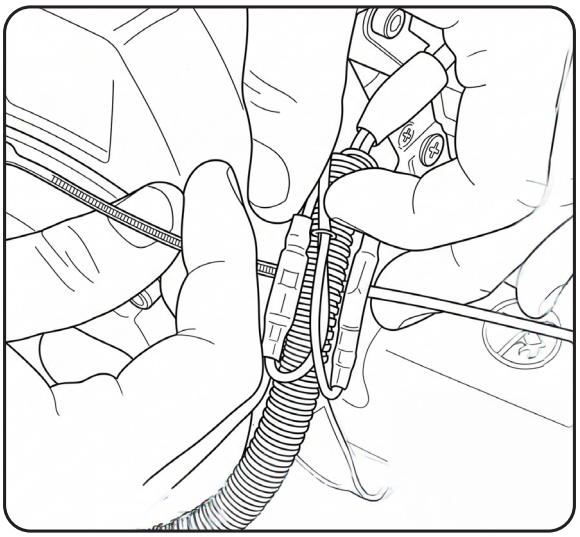

Latest workshop videos are available on our website. Visit our Workshop Resources page to learn more. https://bbta.com.au/pages/workshop-resources

INSTALLING BULL HORN HANDLE

Install the handle into the bracket. Position it in a comfortable operating position, then tighten the four M5×25 screws securely.

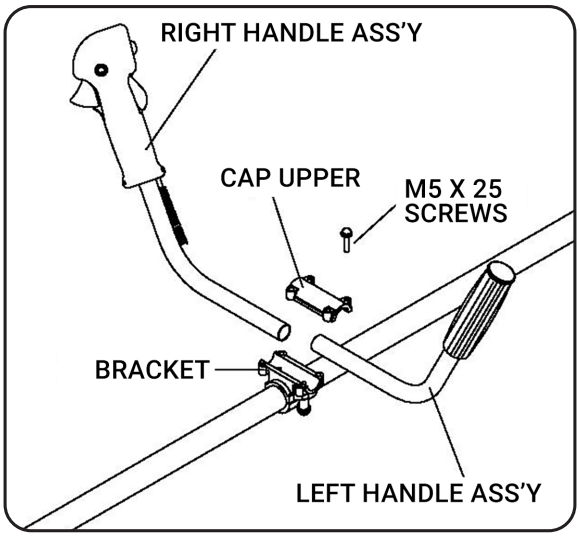

INSTALLING D-HANDLE

Install the handle into the bracket. Position it in a comfortable operating position, then tighten the four M5 × 25 screws securely.

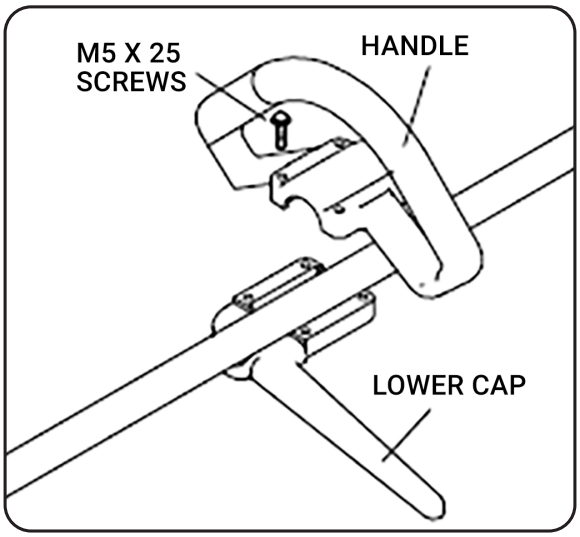

Latest workshop videos are available on our website. Visit our Workshop Resources page to learn more. https://bbta.com.au/pages/workshop-resources

Danger Zone - An Area 15 Metres in Radius

⚠ WARNING

All models of trimmers and Brush Cutters can throw small stones, metal and other small objects as well as the material being cut. Read these Rules of Safe Operation with care.

Read the Owner's Manual carefully. Be thoroughly familiar with the controls and proper use of the unit.

NEVER allow anyone to use the unit without proper instruction. Be sure the operator wears the correct foot, leg, eye, face and hearing protection.

DO NOT rely on the debris shield on the unit to protect your eyes from ricocheting or thrown objects. Keep the area clear of bystanders, children and pets.

NEVER allow children to operate or play with the unit.

DO NOT allow anyone to enter the operating **DANGER ZONE** with you. The danger zone is an area 15 metres in radius (about 16 paces) or 50 feet.

Persons in the **RISK ZONE** beyond the danger zone are advised to wear eye protection from flying objects. If the unit must be used where there are unprotected people, operate at a low throttle speed to reduce the risk of thrown objects.

Move the stop switch to "**STOP**" position when the engine idles, ensure unit is reliable before cutting.

Only continue to operate the unit when stop switch is in good working condition, routine checks for this, is if the cutting attachment stops turning when the engine idles.

⚠ WARNING

In addition to wearing head, eye, face and ear protectors, ensure you wear shoes that protect your feet and improve your footing on slippery surfaces. Do not wear ties, jewellery, or loose dangling clothing which could get caught in the unit.

DO NOT wear open-toed footwear or go bare-foot or bare-legged. In certain situations, you must wear total face and head protection. Pay attention not to kick back and blade thrust.

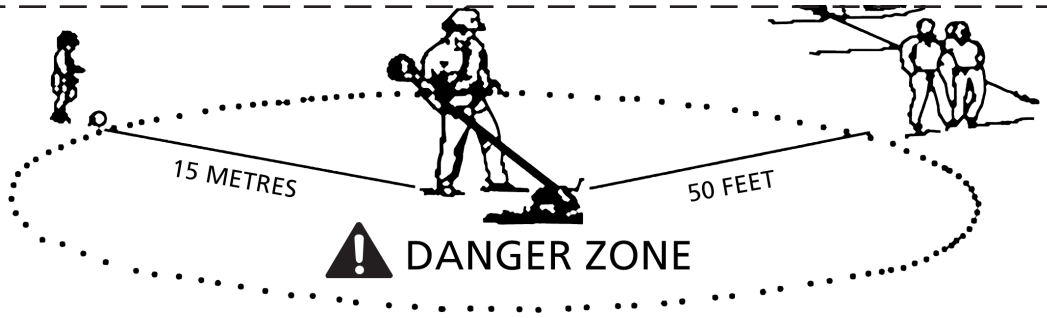

NO PERSON EXCEPT OPERATOR ALLOWED WITHIN 15 METRES RADIUS DANGER ZONE. EYE, EAR, FACE, FOOT, LEG AND BODY PROTECTION MUST BE WORN BY OPERATOR. PERSONS IN ZONE OR RISK AREA BEYOND DANGER ZONE SHOULD WEAR EYE PROTECTION AGAINST THROWN OBJECTS. RISK DIMINISHES WITH DISTANCE FROM DANGER ZONE.

Cutting with a Nylon Head

For nearly all cutting, it is good to tilt the line head so that contact is made on the part of the line circle where the line is moving AWAY from you and the debris shield. (See appropriate picture). This results in the debris being thrown AWAY from you.

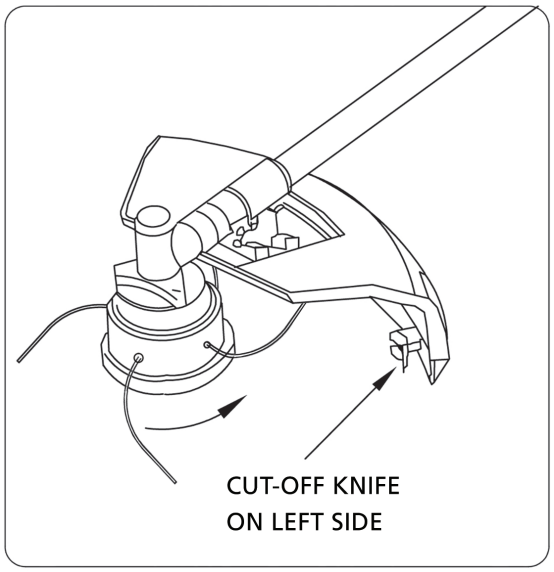

⚠ WARNING

The proper debris shield must be in place on the unit when nylon cutting line is used. The cutting line can flap around if too much line is exposed. Always use the plastic debris shield with cut-off knife when using nylon cutting heads.

⚠ WARNING

Tilting the head to the wrong side will shoot the debris TOWARDS you. If the line head is held flat to the ground so that cutting occurs on the whole line circle, debris will be THROWN at you, drag will slow the engine down, and you will use up a lot of line.

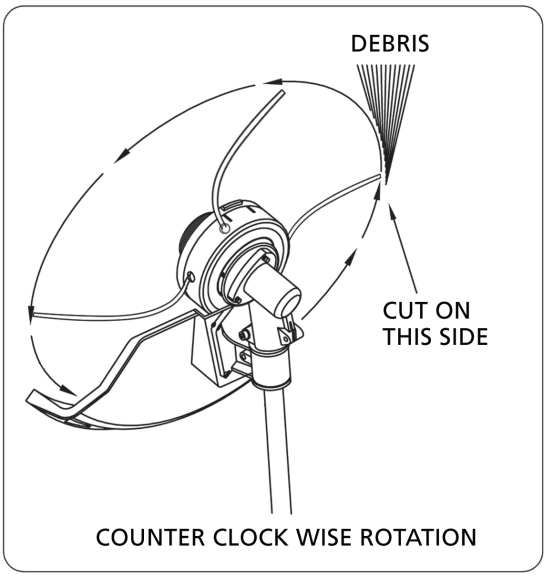

⚠ WARNING

Use quality nylon monofilament line (2.4mm to 3.0mm diameter recommended).

NEVER use wire or wire-reinforced line in place of nylon trimmer line. Load your nylon line cutting head only with nylon trimmer line of the proper diameter.

⚠ WARNING

Use extreme caution when operating over bare spots and gravel, because the line can throw small rock particles at high speeds.

Debris shields on the unit cannot stop objects which bounce or ricochet off hard surfaces.

Trimming

This is feeding the trimmer carefully into the material you wish to cut. Tilt the head slowly to direct debris away from you. If cutting up to a barrier such a fence, wall or tree, approach from an angle where any debris ricocheting off the barrier will fly away from you. Move the line head slowly until the grass is cut right to the barrier, but do not jam (overfeed) the line into the barrier.

If trimming up to a wire mesh or chain linked fence, be careful to feed only up to the wire. If you go to too far the line will snap off around the wire.

Trimming can be done to cut through weed stems one at a time. Place the trimmer line head near the bottom of the weed, never high up which could cause the weed to catch the line. Rather than cut the weed right through, just use the very end of the line to wear through the stem slowly.

⚠ WARNING

DO NOT to use a steel blade for edging or scalping.

Scalping and Edging

Both of these are done with the line head tilted at a steep angle. Scalping is removing top growth leaving the earth bear.

Edging is trimming the grass back where it has spread over a sidewalk or driveway.

During both edging and scalping, hold the unit at a steep angle and in a position where the debris, and any dislodging dirt and stones, will not come back towards you even if it ricochets off the hard surface. Although the picture shows how to edge and scalp, every operator must find for themselves the angles which suits there body size and cutting situation.

⚠ WARNING

DO NOT trim in any area where there are strands of fencing wire. Wear protective safety clothing.

DO NOT cut where you cannot see what the cutting device is cutting.

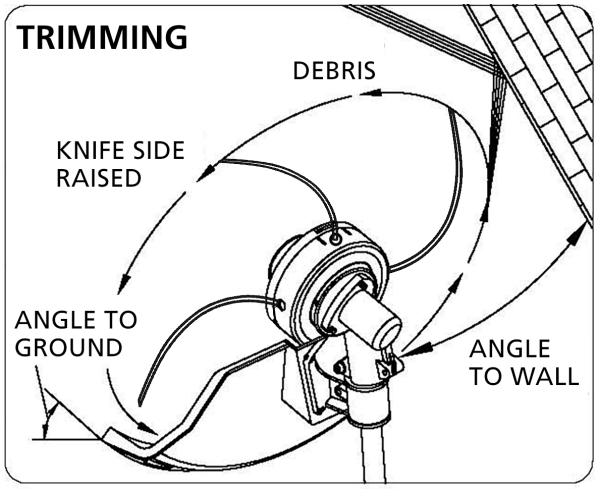

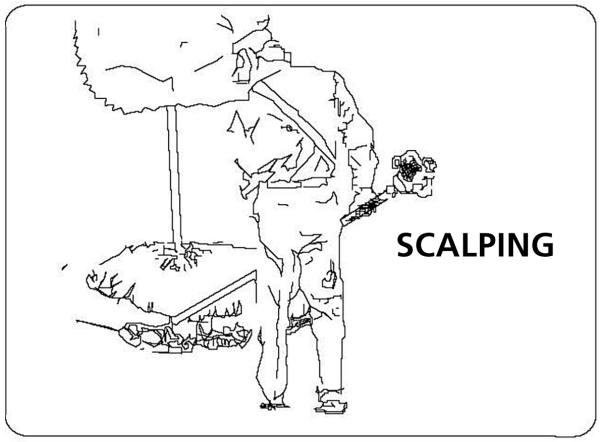

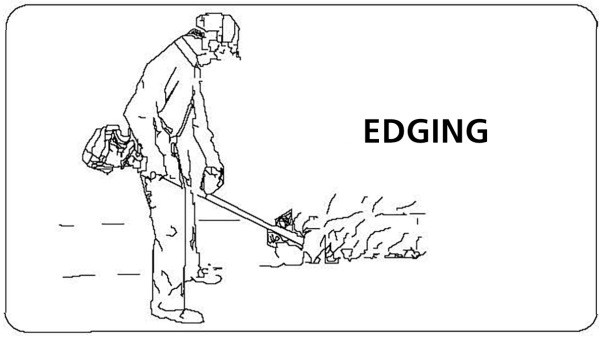

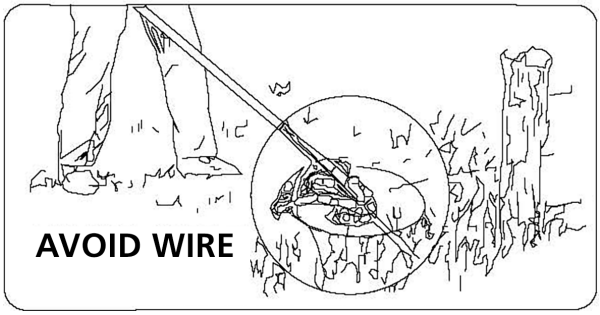

Cutting with a Nylon Head

⚠ WARNING

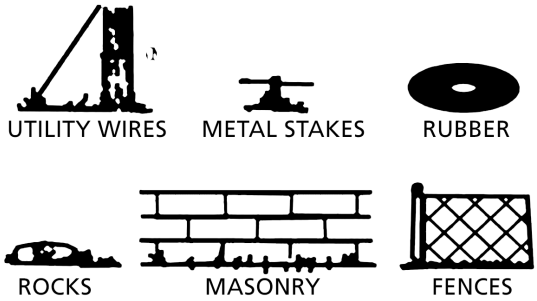

DO NOT TOUCH
THESE TYPES OF OBJECTS WITH BLADE

⚠ WARNING

DO NOT cut with a dull, cracked or damaged metal blade. Before cutting growth, inspect for obstructions such as boulders, metal stakes or strands of wire from broken fences. If an obstruction cannot be removed, mark its location so that you can avoid it with the blade. Rocks and metal will dull or damage a blade. Wires can catch on the blade head and flap around or be thrown into the air.

Scything Weeds

This is cutting by swinging the blade in a level arc. It can quickly clear areas of field grass and weeds. Scything should not be used to cut large, tough weeds or woody growths.

NOTE: DO NOT use a brush blade to cut trees which exceed a diameter of 1/2 to 3/4 inches.

Scything can be done in both directions, or just one way which results in the debris being thrown away from you.

NOTE: You will be hit by some debris if you scythe in both directions.

⚠ WARNING

Use the shoulder harness at all times. Adjust both harness and harness clamp on the unit so that the unit hangs a few inches above ground level. The cutting head and the metal debris shield should be level in all directions. Harness the unit on the right side of your body.

⚠ WARNING

DO NOT USE A BRUSH CUTTER FOR CUTTING TREES

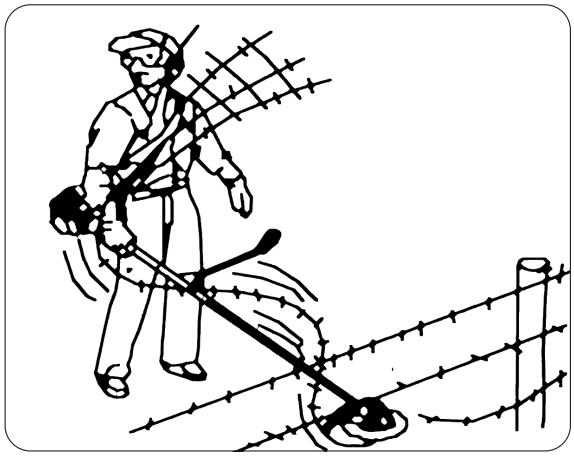

Sawing

This must be done with a saw blade when the weeds are too thick and strong for scything.

If kickback occurs, the blade may be dull, or the material is to too thick and hard that you should use a saw blade instead of the brush blade.

Growth up to 75mm in diameter, which is too thick for scything, may be cut by sawing. Sawing requires judgment on your part whether to cut on the side where the blade pulls away from you but throws back the debris, or on the side where the debris is thrown away from you but the reaction is to push which could cause a kickout (blade thrust).

Always cut on the side of the tree which will cause the tree to fall away from the unit. A kickout may result if the tree falls toward the unit and pinches the blade.

Do not force the blade to cut. Do not change the angle of cut after blade is in the wood. Avoid using any pressure or leverage which could cause the blade to bend or crack.

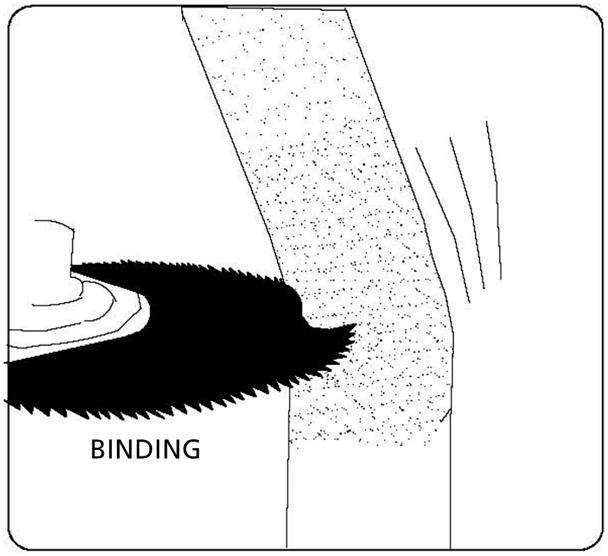

Warning Carbon Monoxide Poisoning

All engines produce carbon monoxide, a deadly, colourless, tasteless, and odourless gas that may be present even without visible exhaust. Dangerous levels can build up in enclosed or poorly ventilated areas.

Inhaling carbon monoxide can cause headaches, drowsiness, nausea, dizziness, confusion, and may be fatal. If symptoms occur, move to fresh air immediately and seek medical attention.

Preventing Carbon Monoxide Poisoning

- **Never** run the engine indoors, as carbon monoxide can reach dangerous levels quickly.
- **Do not** run the engine outdoors where exhaust may be drawn into a building.
- Avoid poorly ventilated outdoor areas where exhaust can become trapped (e.g. pits, valleys, or areas surrounded by hills).
- **Never** operate in enclosed or partially enclosed spaces (e.g. buildings, tents, carports, basements).
- Always direct the exhaust and muffler away from the operator.
- **Never** point the exhaust at anyone.
- Keep all people at a safe distance during operation.

Petrol Fires and Handling Fuel Safely

Fuel and fuel vapours are highly flammable. Never use fuel near any spark, flame, or potential ignition source (e.g. hot water systems, clothes dryers, or electric motors). Keep all flames and sparks away from the engine and fuel. Fuel fires spread quickly and are highly explosive.

Prevention of Petrol Fires

- **Never** fill the fuel tank indoors (e.g. garage, shed, house, porch).
- Always refuel outdoors in a well-ventilated area.
- **Never** add fuel or remove the fuel cap while the engine is running; allow the engine to stop and cool first.
- **Never** drain fuel in an enclosed area.
- Wipe up any spilled fuel immediately and allow vapours to dissipate before starting.
- Ensure the fuel cap is properly installed and tightened before use.
- **Do not** operate the engine if the fuel cap leaks; replace if necessary.
- **Never** smoke while refuelling.
- Use only approved, non-metal portable fuel containers to prevent static discharge.
- **Do not** store the engine indoors with fuel in the tank.
- Tighten the fuel cap vent securely during storage.
- **Never** pour or siphon fuel from the engine by mouth.
- Always have an adult fill the fuel tank.
- **Never** allow children, or anyone under the influence of drugs or alcohol, to refuel the engine.

Burns and Fires

The muffler, muffler guard and other parts of the engine become extremely hot during the operation of the engine. These parts remain extremely hot even after the engine has stopped.

Prevention of Burns and Fires

- **Never** remove the muffler guard from the engine.
- **Never** touch the muffler guard as it is extremely hot and will cause severe burns.
- **Never** touch parts of the engine that become hot after operation.
- Always keep materials and debris away from muffler guard and other hot parts of the engine to avoid fires.

⚠ CAUTION

Hot gases are a normal by-product of a functioning catalytic converter. Follow all safety instructions to prevent burns and fires.

FUEL FOR 4-STROKE ENGINE

36cc 4-Stroke Engine: Add 90 mL of SAE 30 engine oil to the engine oil tank.

Use only petrol which contains NO ETHANOL or METHANOL (types of alcohol). Use **95 octane or higher** unleaded petrol known to be of good quality. This will help avoid possible damage to engine fuel lines and other engine parts.

It is also a good idea to drain the fuel and give the fuel tank a good clean out every 3 months or after 25 hours of use.

⚠ WARNING

Petrol is highly flammable and explosive, and you can be burned or seriously injured when refuelling.

- Stop engine and keep heat, sparks and flame away.
- Refuel only outdoors.
- Wipe up spills immediately.

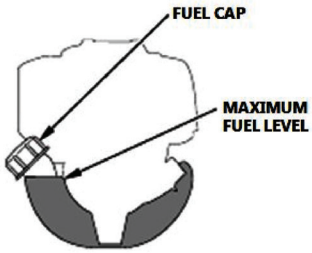

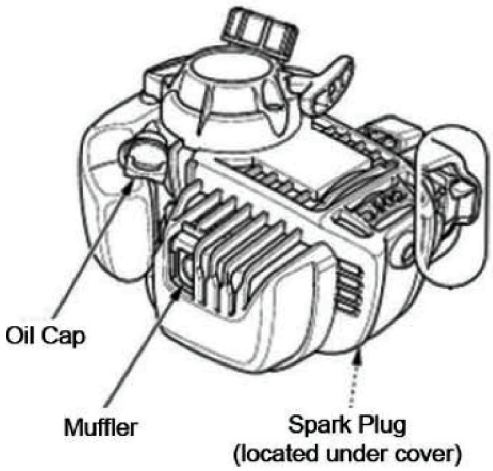

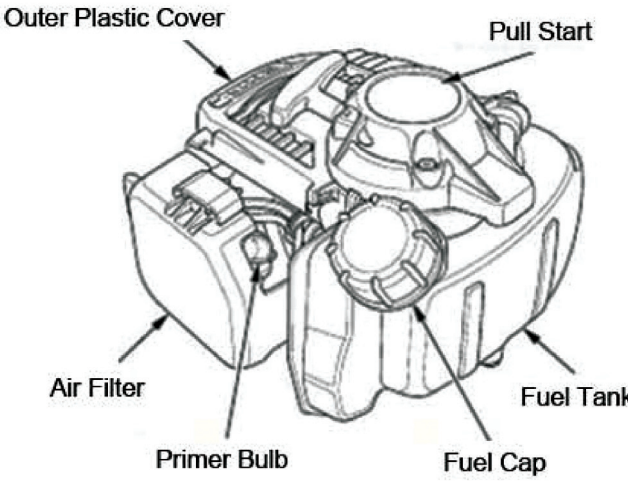

Engine Oil for 4-stroke Engine

Oil is a major factor affecting the performance and service life of your BBT 4-stroke engine. Use a high quality 4-stroke engine oil, we recommend **SAE-30** for general use. Add **90 ml** to the gage limit.

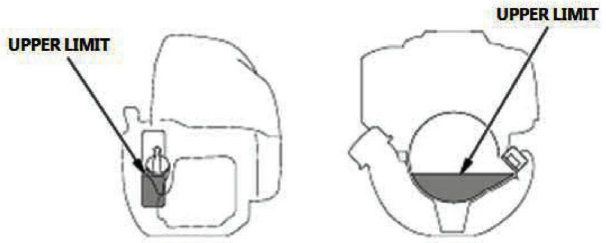

Make sure the **fuel guard at the bottom and place the engine flat on the ground**.

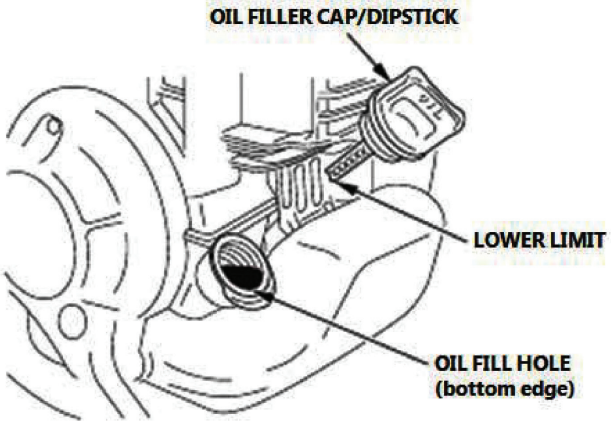

STARTING COLD ENGINE

1. Move the stop switch to the **START** position.

2. Press the primer bulb gently 7 to 10 times. Continue until you see fuel circulating through the bulb; this ensures the carburetor is ready to go.

3. Pull the choke lever UP to the **CLOSED** position. This restricts airflow to help the engine fire up when cold.

Note: If the engine is already warm from recent use, you can usually leave the choke open.

4. Slowly pull the starter handle until you feel slight resistance.

5. Give the cord a firm, swift pull. Continue until you hear the engine "cough" or "false fire" (a brief sound of ignition that doesn't stay running).

6. Once the engine has false-fired, pull the handle firmly again until the engine starts and stays running. Always guide the cord back gently rather than letting it snap against the housing.

7. As the engine begins to fire and steady itself, slowly move the choke lever down to the **OPEN** position.

8. Let the engine idle and warm up for 2–3 minutes. This allows the oil and fuel to reach optimal operating temperature before you put the machine to work.

Pro Tip: If the engine doesn't start after 5–6 firm pulls with the choke closed, move the lever to the half-way point to prevent "flooding" the engine with too much fuel.

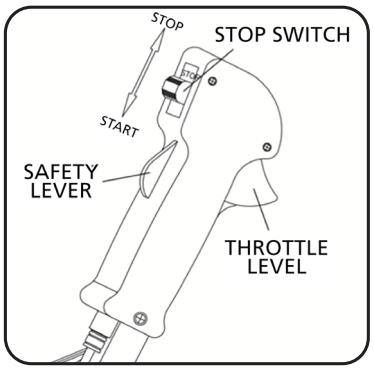

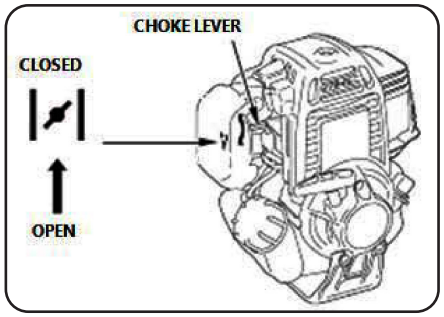

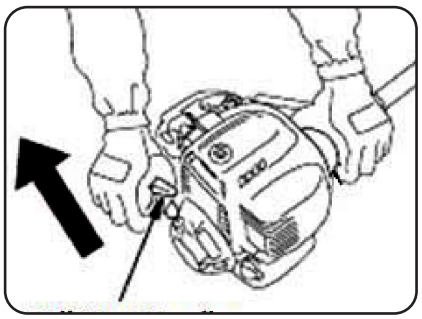

Control Positions (warm engine)

Set the throttle trigger to "fast idle".

Slide the ignition switch to the **"I" (START)** position.

Moving the choke lever down to the "**OPEN**" position

If the engine did not continue to run, repeat the appropriate cranking procedure (warm or cold engine).

When the engine starts, clear excess fuel from the combustion chamber by revving the engine several times with the throttle trigger (operating the trigger will automatically disengage the “fast idle” setting).

⚠ WARNING

The cutting attachment will engage and rotate as the engine starts and accelerates.

If The Engine Fails To Start

Repeat the appropriate cranking procedure (warm or cold engine). If the engine fails to start after repeated attempts, the engine is likely flooded. Proceed to the following procedure.

Starting A Flooded Engine

1. Disconnect the spark plug lead, and then use the spark plug wrench to remove the spark plug (turn counterclockwise to remove).

If the spark plug is fouled or soaked with fuel, clean the plug as necessary.

2. Open the choke and fully depress the throttle trigger with your left hand, then pull the starter handle rapidly with your right hand to clear excess fuel from the combustion chamber.

⚠ CAUTION

Incorrect spark plug installation can result in serious engine damage.

3. Reinstall the spark plug and tighten it firmly. If a torque wrench is available, torque the spark plug to **16.7-18.6 N.m**.

4. Repeat the starting procedure for a warm engine.

5. If the engine still fails to start, refer to the troubleshooting section near the end of this manual.

Stopping The Engine

1. **Cool the engine** by allowing it to idle for two or three minutes.

2. **Slide the ignition switch** to the “**o**” or **STOP** position.

⚠ WARNING

The cutting attachment can continue rotating after the engine is switched off!

MAINTENANCE

The Importance of Maintenance

Proper upkeep ensures safe, economical, and low-emission operation.

Service Guidelines

While the manual covers routine checks and basic repairs, complex tasks requiring special tools should be handled by a professional mechanic.

⚠ DANGER

Failure to perform maintenance or fix issues before use can lead to serious injury or death. Always follow the manual's schedule.

⚠ WARNING

- Stop the engine, disconnect the spark plug, and let the machine cool before servicing.
- Ensure you have the proper tools and skills before starting.
- Avoid fire risks: Keep fuel away from sparks/flames and never use petrol as a cleaning solvent.

Maintenance Schedule

		Each Use	3 mos or 25 hrs	6 mos or 50 hrs	12 mos or 100 hrs
Nuts & Bolt	**Check & Tighten**	X			
Fuel System	**Check for leaks**	X			
Transmission/Gearbox	**Check Operation**		X		
Transmission	**Grease**		X		
Spark Plug	**Clean & Gap**				X
Fuel Filter & Lines	**Check & Clean**		X		
Air Filter	**Check & Clean**	X	X		
	Replace				X
Engine Oil	**Check level**	X			
	Change		X		

AIR FILTER

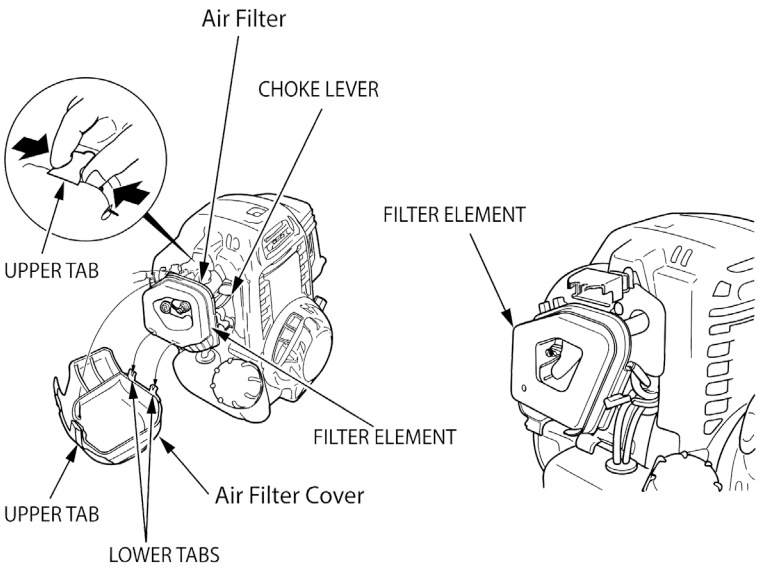

- Accumulated dust in the air filter will reduce engine efficiency. Increase fuel consumption and allow abrasive particles to pass into the engine. Remove the air filter as often as necessary to maintain in a clean condition.
- Light surface dust can readily be removed by tapping the filter. Heavy deposits should be washed out in suitable solvent.
- Remove filter cover by loosening air filter cover knob.

CHECK SPARK PLUG

- Do not attempt to remove the plug from a hot engine to avoid damaging the threads.
- Clean or replace the plug if fouled with heavy oily deposits.
- Replace the plug if the centre electrode is worn rounded at the end.
- Spark gap 0.6 - 0.7mm (.023” - .028”)
- Fastening torque = 145 - 155 kg.cm (125 -135 in.lb)

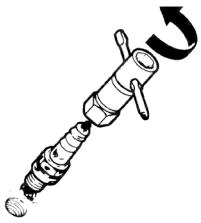

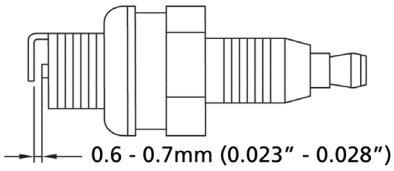

FUEL FILTER

- Fuel tank is fitted with a filter.
- Filter is situated at the free end of fuel pipe and can be picked out through fuel port with a piece of hooked wire or something similar.
- When the inside of the fuel tank is dirty, it can be cleaned by rinsing the tank out with petrol.
- When filter is dirty, replace the filter.
- Check the fuel filter periodically. Do not allow dust to enter into fuel tank. A clogged filter will cause difficulty in starting engine or abnormalities in the engines performance.

ADJUSTING CARBURETTOR

NOTE: Do not adjust carburettor unless necessary. Improper adjustment may cause engine damage and void warranty.

MUFFLER

Remove the muffler, insert a screwdriver into the vent, and wipe away any carbon buildup. Wipe away any carbon buildup on the muffler exhaust vent and cylinder exhaust port at the same time.

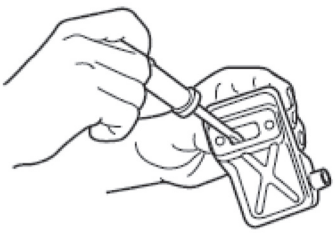

⚠ WARNING

Inspect periodically, the muffler for loose fasteners, any damage or corrosion. If any sign of exhaust leakage is found, stop using the machine and have it repaired immediately.

Failing to do so may result in the engine catching on fire.

TROUBLE SHOOTING

ENGINE DOES NOT START

What to check		Possible Causes	Remedy
Does the engine crank?	NO →	Faulty recoil starter. Fluid in the crankcase. Internal damage.	Return unit to the dealer.
YES ↓			
Good compression?	NO →	Loose spark plug. Excess wear on cylinder, piston, rings	Tighten and re-test.
YES ↓			
Does the tank contain fresh fuel of the proper grade?	NO →	Fuel incorrect, stale, or contaminated. (2-stroke Engine) fuel mixture incorrect.	Refill with fresh fuel. Use 95 Octone or hight. (2-stroke Engine) petrol and engine oil 25:1 ratio
YES ↓			
Is fuel visible and moving in the return line when priming?	NO →	Check for clogged fuel filter and/or vent.	Clean as required; restart.
YES ↓			
Is there spark at the spark plug wire terminal?	NO →	The ignition switch is in “0” (Stop) position. Faulty ignition ground. Faulty transitor unit.	Move switch to “1” (Start) position and restart. Return unit to the dealer.
YES ↓			
Check the spark plug	NO →	If the spark plug is wet, excess fuel may be in the cylinder.	Crank the engine with the spark plug removed, replace the spark plug, and restart.
		The spark plug is foulded or improperly gapped.	Clean and re-gap the spark plug to 0.6-0.7mm. Restart.
		The spark plug is damaged internally or of the wrong size.	Replace the spark plug and restart.

ENGINE LACKS POWER

What to check	Possible Causes	Remedy
Is the engine overheating?	Operator is overworking the machine	Operate the machine at a slower rate.
	Carburetor mixture is too lean.	Return unit to dealer.
	Fan, fan cover, cylinder fins dirty or damaged.	Clean, repair or replace as necessary.
Engine is rough at all speeds. May also have black smoke and/or unburned fuel at the exhaust.	Clogged air cleaner element.	Move switch to “1” (Start) position and restart. Return unit to the dealer.
	Loose or damaged spark plug.	Ensure correct spark plug in use. Crank the engine with the spark plug removed, replace the spark plug, and restart.
	Air leakage or clogged fuel line.	Clean and re-gap the spark plug to 0.6-0.7mm. Restart.
	Water in the fuel.	Replace the spark plug and restart.
	Piston seisure.	Return unit to dealer.
	Faulty carburetor and/or diaphragm.	Return unit to dealer.
Engine is knocking	Overheating condition.	See above.
	Improper fuel.	Ensure 95 Octone or higher fuel in use. (2-stroke Engine) petrol and engine oil 25:1 ratio
	Carbon deposits in the combustion chamber.	Decarbonise.

ADDITIONAL PROBLEMS

What to check	Possible Causes	Remedy
Poor acceleration.	Clogged air cleaner element.	Clean the air cleaner element.
	Clogged fuel filter.	Replace the fuel filter.
	Carburetor mixture too lean.	Return the unit to the dealer.
	Idle speed set too low.	Adjust 2750 min^3 (±250)
Engine stops abruptly.	Switch turned off.	Reset the switch to start positoin.
	Fuel tank empty.	Refuel 95 Octone or higher. (2-stroke Engine) petrol and engine oil 25:1 ratio
	Clogged fuel strainer.	Replace strainer.
	Water in the fuel.	Drain; replace with clean fuel.
	Shorted spark plug or loose terminal.	Ensure correct spark plug in use. Clean and replace spark plug, tighten the terminal.
	Ignition failure.	Replace the ignition unit.
	Piston seizure.	Return unit to the dealer
Engine difficult to shut off.	Ground (stop) wire is disconnected, or switch is defective.	Test and replace as required.
	Overheating due to incorrect spark plug.	Clean and regap to 0.6-0.7mm.
	Overheated engine.	Idle engine until cool.

What to check	What to check	What to check
Cutting attachment rotates at engine idle. →	Engine idle too high.	Set idle: 2750 min^3 (±250)
	Broken clutch spring or worn clutch spring boss.	Replace clutch assembly as requireed, check ideal speed.
	Loose attachment holder.	Inspect and re-tighten holders securely.
Excessive vibration. →	Warped or damaged attachment.	Inspect and replace attachment as required.
	Loose gear case.	Tighten gear case securely.
	Bent main shaft/worn or damaged bushings.	Inspect and replace as necessary.
Attachment will not rotate. →	Shaft not installed in power head or gear case.	Inspect and reinstall as required.
	Broken shaft.	Return unit to the dealer.
	Damaged gear case.	Return unite to the dealer.

SPARE PARTS LIST

36CC ENGINE

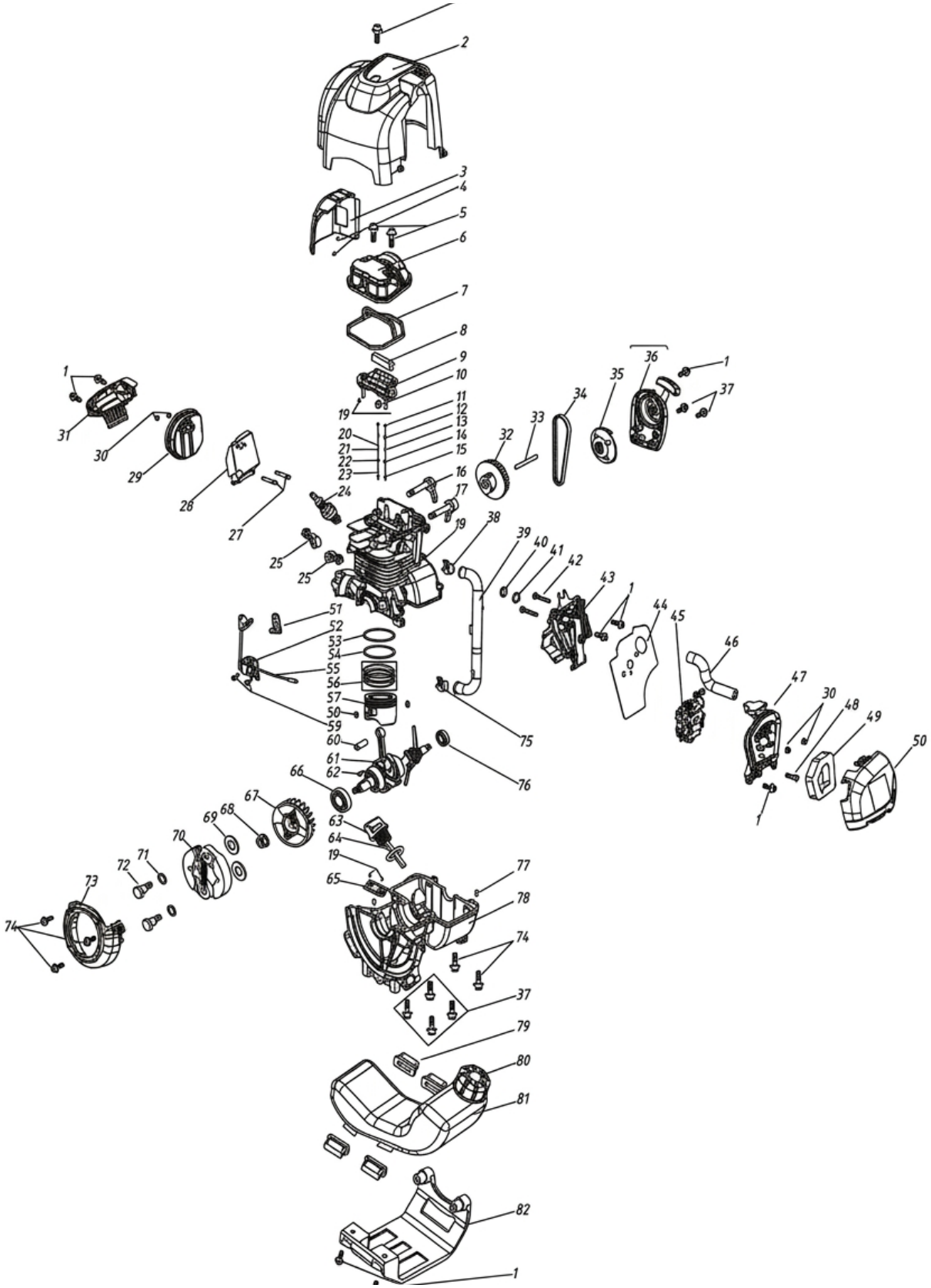

NO	DESCRIPTION	QTY
1	BOLT M5 X 15	9
2	ENGINE COVER	1
3	MUFFLER HEAD SHIELD	1
4	SELF TAPPING SCREW ST3.9 X 10	2
5	SCREW M5 X 12	2
6	ROCKER COVER	1
7	ROCKER COVER GASKET	1
8	OIL GAS SEPARATION GASKET	1
9	INSIDE ROCKER COVER	1
10	SEALING RING	1
11	VALVE SPRING SEAT	2
12	VALVE SPRING	2
13	INTAKE VALVE GUIDE	1
14	INTAKE VALVE SEAT	1
15	INTAKE VALVE	1
16	EXHAUST ROCKER & PIN	1
17	INTAKE ROCKER & PIN	1
18	CYLINDER HEAD	1
19	SCREW M4 X 8	2
20	SCREW M4 X 8	4
21	BAFFLE RING 7	1
22	EXHAUST VALVE GUIDE	1
23	EXHAUST VALVE SEAT	1
24	SPARK PLUG	1
25	INLET VALVE ROCKER ARM	1
26	EXHAUST VALVE ROCKER ARM	1
27	STUD M5 X 55	2
28	MUFFLER BAFFLE	1
29	MUFFLER	1
30	NUT M5	4
31	BAFFLE	1
32	CAM WHEEL	1
33	CAMSHAFT	1
34	TIMING BELT	1
35	STARTER PLATE	1
36	PULL START	1
37	SCREW M5 X 32	6
38	LITTLE CLAMP	1
39	BALANCED TRACEA	1
40	INTAKE MANIFOLD GASKET	1
41	SEALING RING	1

NO	DESCRIPTION	QTY
42	SCREW M5 X 25	2
43	INTAKE MANIFOLD	1
44	CARBURETOR GASKET	1
45	CARBURETOR	1
46	WASTE GAS PIPE	1
47	AIR FILTER INNER HOUSING	1
48	COMBINATION SCREW M5 X 25	1
49	AIR FILTER ELEMENT	1
50	AIR FILTER OUTER HOUSING	1
51	HOOK	1
52	IGNITION COIL	1
53	UPPER PISTON RING	1
54	LOWER PISTON RING	1
55	STOPPING WIRE	1
56	OIL RING ASSEMBLY	1
57	PISTON	1
58	PISTON PIN RING	2
59	BOLT M4 X 16	2
60	PISTON PIN GUDGEON	1
61	CRANKSHAFT ASSEMBLY	1
62	WOODRUFF KEY	1
63	OIL GAUGE	1
64	OIL GAUGE SEAL	1
65	NOT LISTED	1
66	OIL SEAL	1
67	FLYWHEEL	1
68	NUT M8	1
69	WASHER M8	1
70	CLUTCH ASSEMBLY	1
71	WAVE WASHER	2
72	BOLT	2
73	FRONT COVER	1
74	BOLT M5 X 22	3
75	SCREW M5 X 32	2
76	OIL SEAL 25 X 10 X 5	1
77	LOCATING PIN	1
78	CRANK CASE	1
79	RUBBER DAMPING BLOCK	4
80	FUEL TANK CAP	1
81	FUEL TANK	1
82	FUEL TANK GUARD	1

36CC BRUSH CUTTER SHAFT

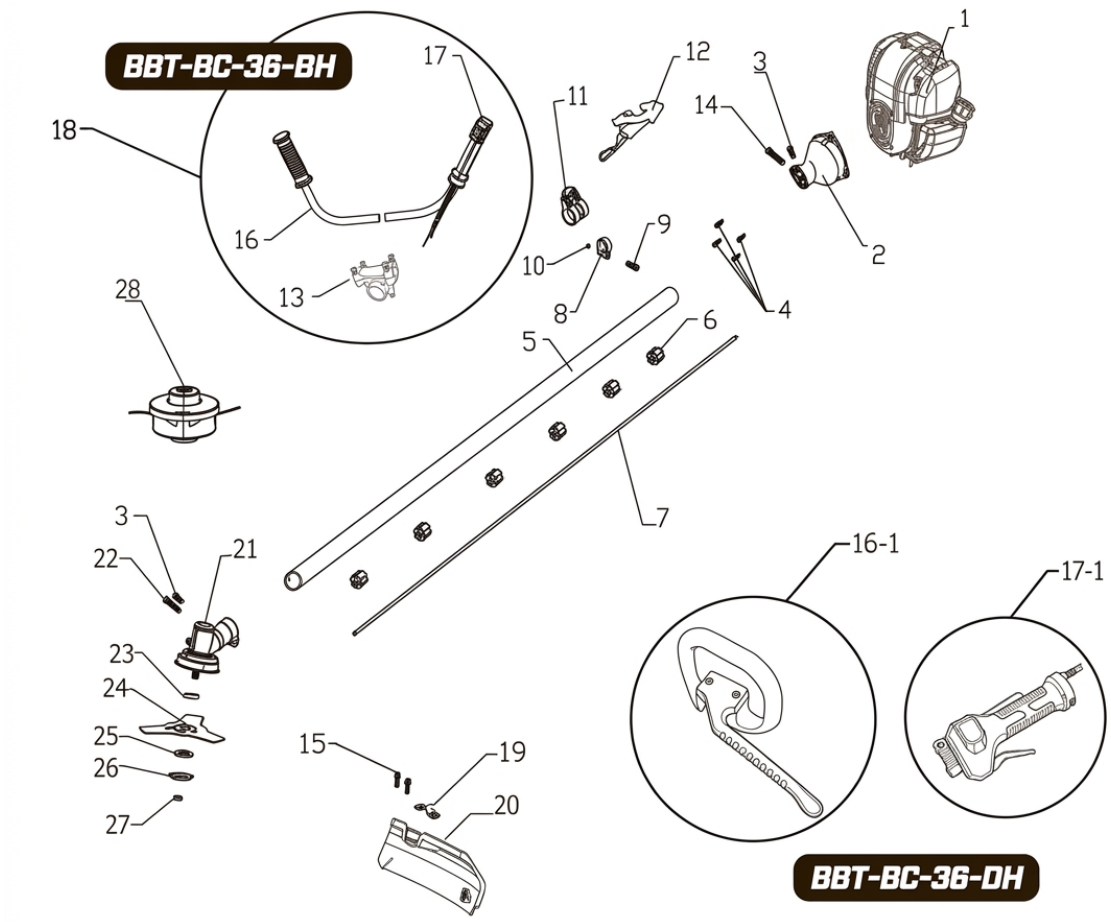

NO	DESCRIPTION	QTY
1	PETROL ENGINE	1
2	BELL HOUSING	1
3	INTERNAL HEX SCREW M5 X 12	2
4	INTERNAL HEX SCREW M6 X 20	4
5	DRIVE SHAFT HOUSING	1
6	OIL BEARING 8 X 23.5	6
7	DRIVE SHAFT 8 X 1522 X 9T	1
8	LOCATING RING 26	1
9	INTERNAL HEX SCREW M5 X 20	1
10	LOCKNUT M5	1
11	SHOULDER STRAP ANCHOR	1
12	SHOULDER STRAPS	1
13	BULL HORN BOSS	1
14	INTERNAL HEX SCREW M6 X 20	1
15	INTERNAL HEX SCREW M6 X 25	2

NO	DESCRIPTION	QTY
16	LEFT HANDLE	1
16-1	D HANDLE ATTACHMENT	1
17	RIGHT HANDLE + TRIGGER ASSY	1
17-1	HAND TRIGGER ASSEMBLY	
18	BULLHORN ASSEMBLY	1
19	GRASS GUARD RETAINING PLATE	1
20	GRASS SHIELD	1
21	GEARBOX 26 X 9T	1
22	M6 SCREW M5 X 25	1
23	TOP WASHER	1
24	BLADE 255-25.4 - 1.4-3T	1
25	LOWER WASHER	1
26	PROTECTION COVER	1
27	HEX NUT M1	1
28	LINE HEAD	1

WARRANTY

This product comes with a 2-year parts warranty for all items used for domestic purposes from the date of purchase. For products used for commercial purposes, the warranty period is 3 months.

Warranty coverage does not include damage caused by normal wear and tear, accidents, misuse, lack of maintenance, neglect, natural disasters, or other external causes. Additionally, damage caused by operating the equipment in a manner outside the described instructions will not be covered. The warranty is considered void if the item has been modified, altered, or tampered with by a person, excluding standard periodic maintenance.

The warranty does not cover consumables such as tyres, blades, belts, brakes, chains, clutches, bearings, and pull starts.

Misuse or Abuse: We do not offer a warranty on items damaged due to misuse, abuse, or infrequent servicing. No refund or exchange will be provided in such instances. Please check each item description for further warranty details, as some specific components of power equipment are not covered. Warranties do not cover issues arising from lack of oil in engines or improper oil-fuel mixtures where required

Australian Consumer Law: Our goods come with guarantees that cannot be excluded under the Australian Consumer Law. You are entitled to a replacement or refund for a major failure and compensation for any other reasonably foreseeable loss or damage. You are also entitled to have the goods repaired or replaced if they fail to be of acceptable quality and the failure does not amount to a major failure.

Customer Support

For further assistance, kindly reach out to our dedicated Customer Support Department at Bigger Boyz Toyz. We are here to assist you.

Phone: 02 4257 4787
Email: bbt@bbta.com.au
Warehouse: Unit 2/3 Delta Place, Albion Park Rail NSW 2527

BIGGER BOYZ TOYZ

BBTA.COM.AU

Copyright © Bigger Boyz Toyz Australia

Unit 2/3 Delta Place Albion Park Rail NSW 2527 • 02 4257 4787